Watch Repair for Beginners

An Illustrated How-to-Guide for the Beginner Watch Repairer

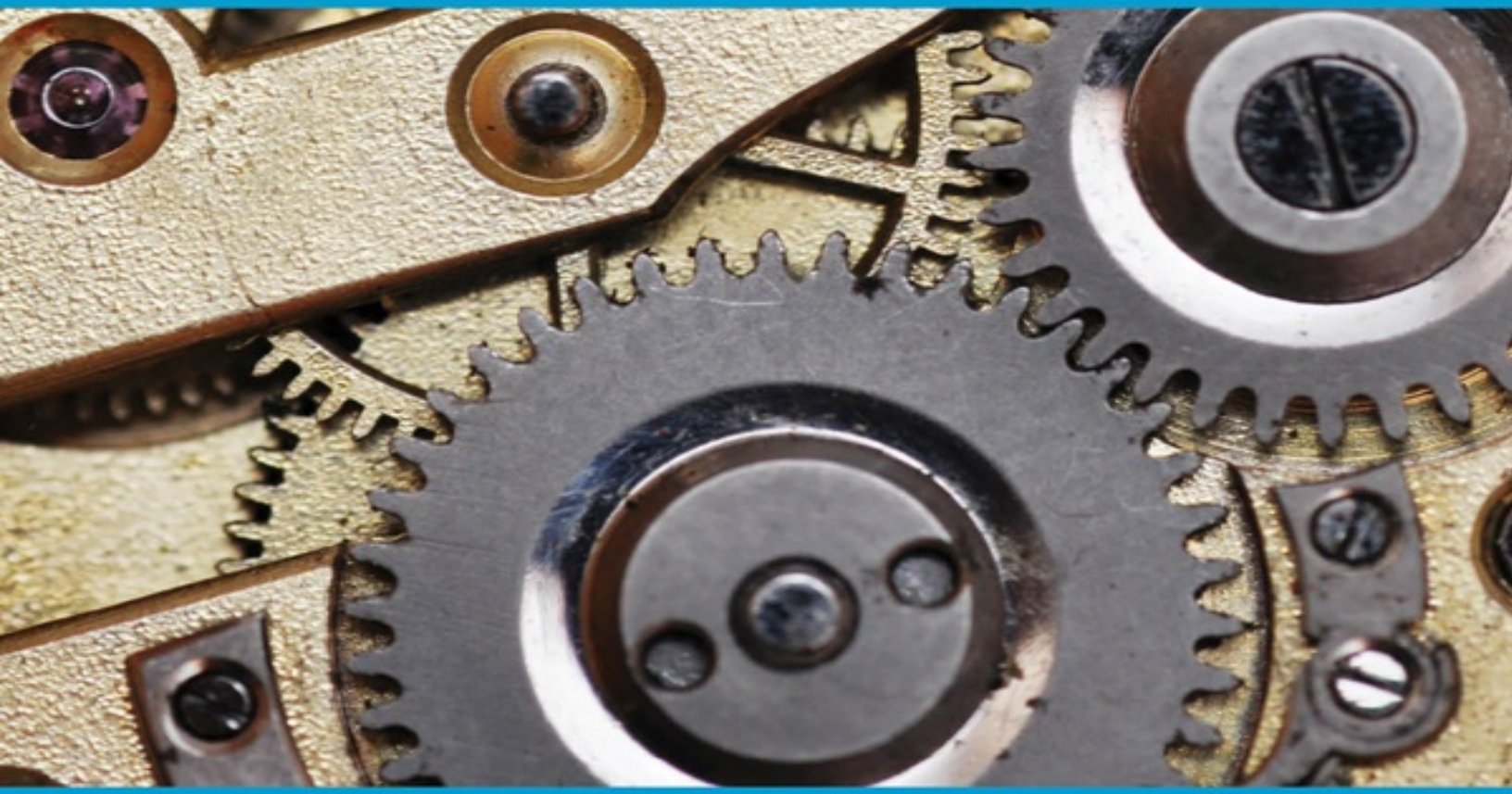

Harold C. Kelly

Watch Repair for Beginners

An Illustrated How-to-Guide for the Beginner Watch Repairer

Harold C. Kelly

Skyhorse Publishing

Copyright © 2012 by Skyhorse Publishing, Inc.

All Rights Reserved. No part of this book may be reproduced in any manner without the express written consent of the publisher, except in the case of brief excerpts in critical reviews or articles. All inquiries should be addressed to Skyhorse Publishing, 307 West 36th Street, 11th Floor, New York, NY 10018.

Skyhorse Publishing books may be purchased in bulk at special discounts for sales promotion, corporate gifts, fund-raising, or educational purposes. Special editions can also be created to specifications. For details, contact the Special Sales Department, Skyhorse Publishing, 307 West 36th Street, 11th Floor, New York, NY 10018 or info@skyhorsepublishing.com.

Skyhorse® and Skyhorse Publishing® are registered trademarks of Skyhorse Publishing, Inc.®, a Delaware corporation.

Visit our website at www.skyhorsepublishing.com.

10 9 8 7 6 5 4 3 2 1

Library of Congress Cataloging-in-Publication Data is available on file.

ISBN: 978-1-61608-373-1

Printed in the United States of America

PREFACE

THIS BOOK was prepared for use as a home study course in horology and as a reference work for the student in the horological schools. In its preparation, the author has kept in mind the practical and theoretical knowledge required by those organizations that prepare examinations and the state board examinations of the several states which require a license to practice horology.

The author has consulted original sources and especially the works of those who have made horological history. In addition, much of the work has been drawn from scientific publications, particularly those concerned with the more recent developments.

Most books on watch work give no space to the theoretical analysis. On this point a departure has been made, and the reader will find that, in addition to the practical treatment, there is a general survey of horological theory.

It is recognized that the practice of horology is largely one of manual skill, the acquisition of a delicate touch, and muscular control of the wrist and fingers. Practical work is, then, the starting point, and the material in this book is so arranged. One must perform, at the outset, a satisfactory job of cleaning and repairing a clock or watch before the more intricate work of isochronal, position, and temperature adjusting can be achieved. When this plan of attaining a horological education is followed, the student will find himself developing progressively toward a successful career in a very interesting and pleasant semiprofession.

HAROLD C. KELLY

263 May Avenue
Monrovia, California

CONTENTS

Preface
Introduction

Part I: PRACTICAL HOROLOGY

1. Introductory Remarks to Beginners
2. Practical Clock Repairing
3. Practical Watch Repairing
4. Repair and Adjustment Problems Taken From Practice

Part II: THE MECHANICS OF HOROLOGY

1. Wheel Work of Pendulum Clocks
2. Wheel Work of Balance Wheel Clocks and Watches
3. Gearing
4. Escapements for Pendulum Clocks
5. Escapements for Balance Wheel Timepieces
6. Striking Mechanisms
7. Automatic Watches
8. Stop Watches and Chronographs
9. Calendar Mechanisms

Part III: THEORETICAL HOROLOGY

1. A Study of the Pendulum
2. A Study of the Balance and Balance Spring

Bibliography
Index

INTRODUCTION

TIME AND TIME RECKONING

What is time? It is a something that has baffled thoughtful men since the beginning of civilized history. Innumerable astronomers, mathematicians, scientists, and philosophers have investigated this thing called time and have advanced various theories and incidentally worked out systems by which it has served mankind.

Old and New Concepts of Time

In 1687, when Sir Isaac Newton published his "Principia," certain philosophical concepts of time were given the world that have been accepted even to this day. In fact the whole science of physics and mechanics is still based upon these concepts and is so taught in our schools.

According to Newton, time is absolute and without any relation to bodies or their motions. It is conceived as unbounded, continuous, unchangeable in the order of its parts and divisible without end. Time exists without matter. If the universe were destroyed, time and space would remain.

On the other hand Dr. Albert Einstein conceived a different idea of time. Einstein said that time is relative. It cannot exist without being associated with space. And since objects in space have three dimensions (length, breadth and height), time is added to these, which gives all objects four dimensions.

Suppose, for example, we are in the capitol building in Washington today at 12:00 a.m. Returning there tomorrow at 12:00 a.m., the space will have changed. The earth has rotated to the east on its axis; it has revolved to the east around the sun; the sun has moved around the Milky Way. Thus when a given period of time has returned, we cannot return to the same given space. Suppose, for another example, the observer was placed on Mars or Venus. The unit value of time would be different.

The dimensions of an object, its shape, the apparent space it occupies, depend, according to Einstein, upon the object's velocity — that is, upon the

time which the observer takes to travel a given distance, relative to the object. Hence it is impossible to define space without time. That is why we now say that the earth on which we live has four dimensions and that time is the fourth dimension.*

---

* A very interesting and highly instructive discourse on Relativity is found in *The Universe and Dr. Einstein*, Lincoln Barnett, William Sloane Associates, New York. Every horologist should read this book.

Thus the scientists have given us two widely divergent concepts of time. We as horologists shall leave that to the scientists to discuss among themselves. Our interest is concerned with obtaining the mean of solar time in order to set our clocks and watches. This much we are certain: that man has *invented* a method of dividing successive rotations of the earth on its axis, in relation to the sun, into days, hours, minutes, and seconds for the purpose of regulating his daily activities. The method by which time is reckoned will now be considered.

The Earth as a Clock

The earth is our master clock. The rotation on its axis may be regarded as practically invariable. The friction of the tides on the ocean floor is said to slow down the earth's motion, but calculations show a retardation of less than a second in 100,000 years.

To get a clear picture of the earth clock and how it works, let us suppose that we can place ourselves in space directly above the north pole, say 250,000 miles from the earth. From this position we may see the earth from the north pole nearly to the equator. Figure 1 shows how it will appear. We may observe the earth's rotation to the east at the rate of 18½ miles a second. Further observation shows that half of the earth is light and the other half is dark, and we may see the sun's rays creep over the north pole as the summer season approaches, and also become darkened when winter comes.

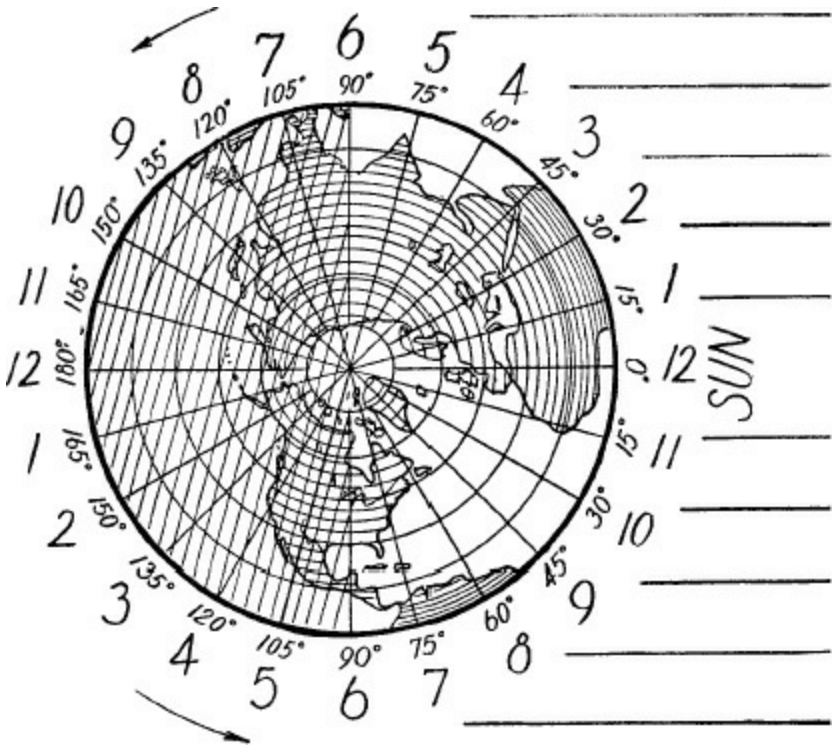

Figure 1.

Our earth clock is to have a 24-hour dial with two sets of figures reading from 1 to 12 to show a.m. and p.m. Meridians of longitude will provide for the location of the figures. The meridians are 15 degrees apart and the prime meridian, which passes through Greenwich, England, indicates 12 a.m. Greenwich time. Our earth clock differs from ordinary clocks in that the "hour hand," which may be any meridian for local time, turns counterclockwise.

The equinoxes. Suppose we are observing the earth at 12 a.m. on March 21 or September 23. These dates are called the vernal and autumnal equinoxes and indicate a period when both the sun and an imaginary location in the sky (the equinoxes, Figure 2) fall on a given meridian at precisely the same time. During the periods of the equinoxes, the equator lies on the plane of the sun's rays, or, to put it in another way: both poles are an equal distance from the center of the sun and night and day are of equal length everywhere on the earth.

A sidereal day is shorter than a solar day. Now, at about 11:56 a.m., mean solar time, on March 22 or September 24, the earth clock has made one complete rotation on its axis and the above given meridian again lies on the

plane of the equinoxes. The duration of one rotation—that is, a rotation of 360 degrees —is called a ***sidereal day.*** In the meantime, the earth, in its revolution around the sun, has moved to a new position as shown in Figure 3. From this location it can be seen that further rotation is required before a solar day is completed. Thus a solar day is almost 4 minutes longer than a sidereal day.

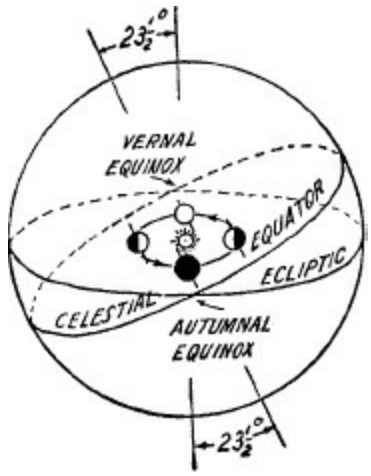

Figure 2.

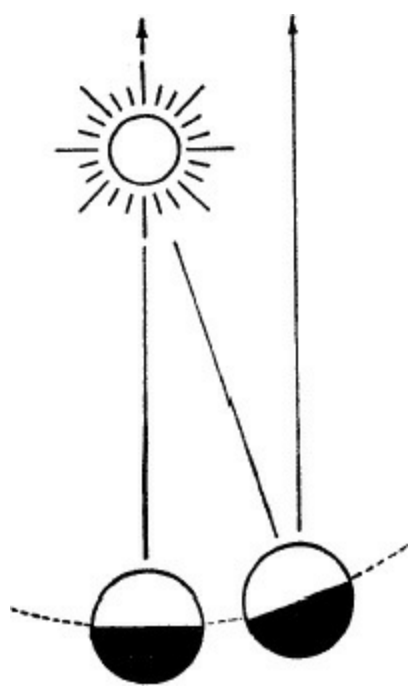

Figure 3. The arrows point toward the vernal equinox.

Sidereal time is determined by observing the more distant stars and is,

therefore, consistent, whereas apparent solar time is *not.* Sidereal time, however, is not useful for civil purposes because our daily activities are governed by the sun's position in the sky. Sidereal noon, for example, comes at night during part of the year and a sidereal year contains 366¼ days instead of the 365½ days of a solar year.

Solar days are longest in December and January. Apparent solar days are not uniform for two reasons. The first can be explained by noting that the earth's orbit is an ellipse and the sun is situated near to one end of the ellipse as shown in Figure 4. When the earth is nearest the sun, which occurs about December 22, its revolution around the sun is fastest and the days are longest because the earth must rotate farther to bring a given meridian to solar noon.

The second reason why apparent solar days are not uniform has to do with the inclination of the earth on its axis. During the latter parts of March and September, the earth's rotation to the east is less than any other time of the year, since part of the motion, as observed at the equator, is south in March and north in September. When the rotation is eastward as in the latter parts of December and June, further rotation is required to complete a solar day. The solar days are, therefore, longest in December and June and shortest in March and September.

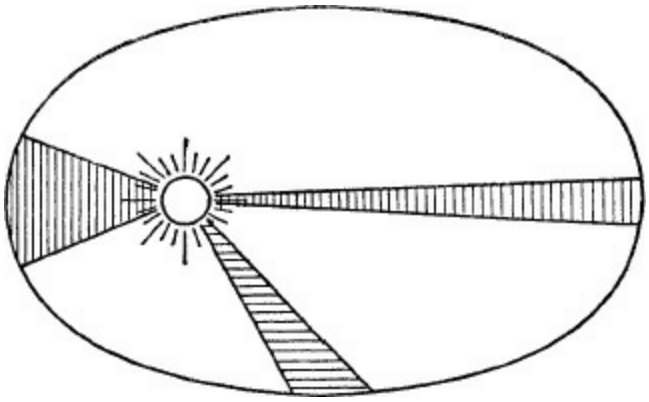

Figure 4.

The effect of the eccentricity of the earth's orbit and the inclination of the earth's axis, when combined, tends to increase the length of the solar day on December 22. The effect of the two phenomena, separately and combined, is shown in Table 1.

TABLE 1

	Jan. 1	Apr. 1	July 1	Oct. 1
	secs.	*secs.*	*secs.*	*secs.*
(1) Eccentricity of orbit	+ 8	+ 4	− 7	− 4
(2) Earth's inclination	+ 21	− 17	+ 12	− 14
(1) + (2)	+ 29	− 13	+ 5	− 18

For the length of the apparent solar days, apply these quantities to the 24 hours of the mean solar day.

Mean time or civil time. For practical reasons, it is necessary to arrange the days so that their lengths are equal. Such an arrangement is called *mean time* or *civil time* and is arrived at by averaging the apparent solar days for a whole year. Civil time begins at midnight and continues through 24 hours to the following midnight.

TABLE 2

	minutes		*minutes*
Jan. 1	− 3¼	July 1	− 3½
" 16	− 9½	" 16	− 6
Feb. 1	− 13½	Aug. 1	− 6¼
" 16	− 14½	" 16	− 4½
Mar. 1	− 12½	Sept. 1	0
" 16	− 9	" 16	+ 5
Apr. 1	− 4	Oct. 1	+ 10
" 15	0	" 16	+ 14
May 1	+ 3	Nov. 1	+ 16¼
" 16	+ 4	" 16	+ 15½
June 1	+ 2½	Dec. 1	+ 11
" 15	0	" 24	0

The equation of time. The plus sign indicates that the apparent sun is faster than mean time and the minus sign indicates the sun as slower than mean time.

Equation of time. For the same reasons that the length of the apparent solar days are not uniform we find that the sun is either fast or slow to the clock. Solar time and mean time agree only four times a year. The difference for all other periods is called the *equation of time*. Table 2 shows the rates of apparent solar noon as related to mean solar noon.

Computing Mean Time by the Stars

Our observations of the earth from the distant point on the celestial north pole are now completed. We shall again come "down to earth" and place ourselves on the prime meridian at Greenwich, England, for a different "point of view." We shall visit the Greenwich observatory and possibly take a "peek" through a special kind of telescope called the transit instrument, Figure 5. By means of the transit instrument, Greenwich civil time is given to the world.

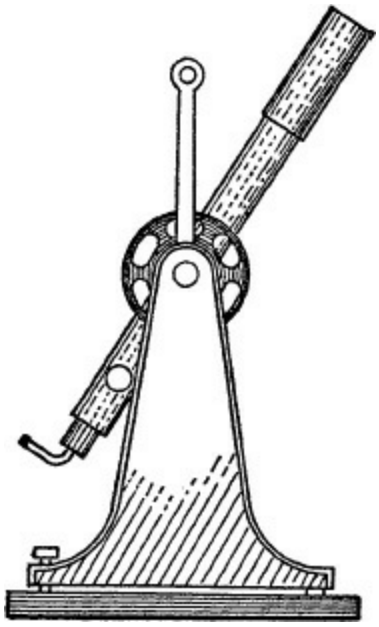

Figure 5. The transit instrument.

The observatory has a sidereal clock. By consulting sidereal time, the astronomer can point the transit instrument to a star of known position within a few minutes of its appearance. According to the sidereal clock, the stars are always in the same place at any given time. The sun is either fast or slow most of the year as compared with the clock, but the stars are never fast or slow.

It is essential that the transit instrument be secured in a rigid position. The axis lies in an east-west position and is pivoted so the line of vision is along the plane of the prime meridian. The astronomer has previously adjusted the instrument to the path of a fixed star that lies on the meridian.

It is possible that the astronomer will let the reader look through the

transit instrument. Looking through the eye piece, the observer will see a number of lines, seven in number, as shown in Figure 6. These are for greater accuracy in following the star as it crosses each of the lines. One or two stars not intended for a particular time calculation may be seen.

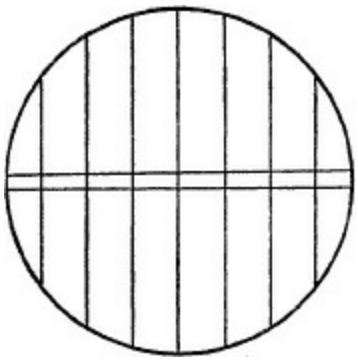

Figure 6.

It is now about the time for the fixed star to cross the meridian. The astronomer seats himself before the instrument and looks through the eye piece. The observer has his finger on an electric button. When the star passes the second line in the eye piece, he presses the button. He does so again when the star passes the center line and again on the sixth line. The three presses of the button cause three notches to be cut on a moving tape of a recording chronograph. In this manner, time is recorded to a fraction of a second.

There is, however, the personal equation, a possible error in which the observer may record the arrival of the star a little too soon or too late. This error is avoided in the best modern observatories by replacing the reticle with a moving wire which keeps pace with the star's image. When the wire reaches a given point, electrical contact is made automatically.

Various countries publish astronomical almanacs which list a large number of stars, giving the *right ascension* and *declination.* From the right ascension given, the astronomer can calculate the time when the star crosses his meridian. By comparing the sidereal clock with the observed time, the clock error, if any, can be noted and accordingly corrected.

It is observed that we have been taking account of sidereal time only. Star observations are much easier and more accurate than solar observations. Mean solar time can afterwards be computed by referring to tables in the almanacs.

In the United States, correct time is broadcast daily by telegraph and radio

from the naval observatory at Washington. Signals are sent out at noon, Eastern standard time, by consulting an astronomical clock. These are rebroadcast by different agencies to the four different time zones.

Time reckoning without special equipment. One need not possess a transit instrument to obtain time from the stars. In fact, no special equipment is needed at all. Choose a window of your home, preferably one to the south where a church steeple, radio tower, or television aerial can be seen. Secure a large piece of cardboard and, with a sharp instrument as a pencil, make a small hole in it. Place the cardboard over the window and, looking through the hole, watch the progress of a particular star until it disappears behind the distant object selected. At the moment this happens, signal an assistant who is observing a clock, for the exact time a star disappears must be noted. On the following evening the same star will vanish behind the fixed point 3 minutes and 56 seconds sooner than indicated by the correct civil time. If the clock does not show this difference, the time is incorrect and must be made right.

If the time is not taken daily, merely multiply 3 minutes and 56 seconds by the number of days that have elapsed since the first observation. Subtract the results of the above calculation from the time of the first observation. The answer is the time the clock ought to show.

New stars must be selected after a month or two as they move to the daylight hours and become invisible.

Should you observe a planet instead of a star, time reckoning will not work. Planets move independently as related to the stars, and a few nights observation will determine which is a star or a planet.

Time Zones

Since 15 degrees of longitude represent 1 hour change in time, time zones have been arranged throughout the world. The inconvenience of continually resetting our watches when traveling great distances is avoided. The standard meridians show mean solar time and the zones extend roughly 7½ degrees east and west of the meridians.

The United States was divided into four standard time belts in 1883. It was the building of transcontinental railroads that encouraged their establishment. In 1884, the president of the United States suggested an international conference to establish a system of time zones for the entire

world. The conference, with twenty-six nations represented, met in Washington. The majority of them favored making the meridian of Greenwich zero longitude. Meridians of 15 degrees each were accordingly fixed with an international date line at 180 degrees.

The International Date Line. Thus by general consent a line through the Pacific Ocean became the place where new days begin. By going east, hours are lost until the date line is reached. Then a day is added. In traveling west, hours are gained until the date line is reached, when a day is subtracted.

The hours of the day, however, continue without a break in either direction.

The necessity for a date line is seen in supposing that we travel from Greenwich to the west as fast as the earth rotates east. The sun would not move during the entire trip. Time, accordingly, would not change and we would return to Greenwich one day late if the date line had not been created.

Daylight Saving Time

Daylight saving time was first put into effect in the United States on May 21, 1916. The experiment was successful and has been approved by a majority ever since. Clocks have been set ahead one hour during the summer in most countries in recent years.

Those opposed are of the opinion that time is of a divine nature and man should not tamper with what they call “God’s time.” On the contrary, man has consistently tampered with time long before the sundial became obsolete. The truth is: civil time, which these people accept, varies from apparent solar time as much as 17 minutes in a day. And, furthermore, the dividing lines of the time zones differ by at least ½ hour from the time of meridian chosen.

PART I

PRACTICAL HOROLOGY

PART I

Chapter One

INTRODUCTORY REMARKS TO BEGINNERS

WHEN THE horological student first examines the tool and material catalogs of those companies who cater to the needs of horologists, he is, no doubt, bewildered because of the vast array of tools, materials, and supplies. It is customary that the workman own his own tools and it is admitted that a complete set runs into considerable money. The beginner need not be disturbed regarding this point, as it is possible to start working with a few essential tools. Later, as new techniques are learned, the required tools may be purchased. In fact, most horologists build up their tool equipment gradually over a period of years. Horology, it seems, is that type of semi-profession where the unfolding of skills develop in order from one prerequisite to the next. This explains why the tool requirement is one of gradual expansion. Horologists often make, or have a machinist make, tools of their own invention or design as special needs arise.

Tools, Materials, and Supplies

In this section we are concerned with the tool and material needs of beginners and the manner in which these items are prepared for use. We shall explain, also, the reconditioning of tools and supplies which become necessary because of ordinary wear.

Screw drivers. In clock work, three or more large screw drivers of varying widths are needed. As purchased, the blades are too thick and need to be ground narrower to fit the slot in most screws. The student needs a Carborundum grinding wheel 2½ inches in diameter, and mounted on an arbor for use in the lathe. The grinding wheel will prove to be a most essential part of the horologist's equipment, being useful in innumerable ways besides that of reconditioning tools.

Watch screw drivers especially must be kept in good condition. In grinding these, use an eye loupe. Hold the blade to the side of the wheel, and finish by slightly touching up the end of the blade on the front face of the wheel. Watch screw drivers are sold in sets of four or five. Two additional screw drivers, called *jewel screw drivers,* are needed to remove the very small screws that hold the cap jewels in place.

Gravers. Gravers for turning in the lathe are ordinarily made of fine Swedish steel, hardened and tempered ready for use. These are sharpened on an Arkansas stone by adding a small amount of Pike oilstone oil. Hold the graver as one would grasp a pen or pencil and, with a sweeping motion, grind the graver to the shape shown in catalogs of tool dealers.

In recent years, an extra hard alloy called *carbide* has been used for gravers. It can be sharpened only on a diamond lap and is useful in cutting the hardest steel. Carbide is very brittle, chips easily, and cannot, therefore, be ground to a long point.

Tweezers. The supply of tweezers should be quite large. Long, heavy tweezers are needed for clocks, and smaller delicate tweezers for watches. One pair with extra fine and thin points are used for balance springs and should not be used for any other work.

Tweezers, like screw drivers, need to be reconditioned occasionally. Spread the points so that they lie on both sides of the grinding wheel. Rest the other end of the tweezers on the bed of the lathe. Now bring the inside of one point to the grinding wheel and grind the surface. Reverse the tweezers and grind the other point. This takes some practice to do a good job, but it is possible to restore the tweezers to a condition as good as new.

Eye loupes. For general use, a 3-inch glass is needed. For balance pivots of watches, use a pivot loupe for examination. An extra strong loupe, ½-inch focus, is often desirable. The material catalogs show a wide selection from which to choose, and it is advisable to purchase only the better grades.

Other essential tools. Many uses will be found for flat-nosed pliers, and cutting pliers. A Number 1 file is required for general use, and for specialized requirements we need a set of needle files. The beginner’s equipment also includes two small hammers, one with a steel head for riveting and one of brass for use with the staking tool. There are, of course, many other tools, but these will be mentioned when the various types of repair jobs are taken up.

Materials for clocks. In order to start work at all, we shall need cleaning solutions. High-test gasoline or white gasoline may be used on alarm clocks, but in the better grade of clocks where the movements are taken completely apart, it is preferred to use the especially prepared cleaning solutions sold by material dealers. To clean a clock movement, a rather stiff washout brush is required. Use pegwood for cleaning the holes in the plates and chemically treated sawdust for drying the plates, wheels, and other parts.

A supply of clock pins, and clock washers is needed, for these are sometimes missing in the clock or possibly lost in the course of repairing. A bottle of clock oil is obviously needed, together with an oiler which may be purchased or made from a large broach. An assortment of clock bushings is desirable, although these can be made when required. Pendulum rods and mainsprings are usually purchased as needed.

Materials for watches. The materials for watches are, of necessity, much more numerous than those for clocks. In addition to cleaning and drying solutions, watch oil, oilers, oil cups, and pegwood, we need a stock of mainsprings, balance staffs, balance jewels, plate jewels, roller jewels, timing washers, watch papers, jewel cement, crystal cement, and pith. It is desirable, too, to have a large collection of old watch movements from which parts can be taken.

GRINDING AND POLISHING POWDERS

The grinding and polishing of steel parts, train wheel pivots, and balance pivots require the use and preparation of a variety of abrasive and polishing powders. These include Carborundum powder, oilstone powder, crocus, saphirine, and diamantine. The above items are listed in the order of their abrasive qualities. Carborundum cuts rapidly and produces a coarse, grey finish. The powder is made in several grades, but only the finer grades are useful in horology. Oilstone powder is quite fine, but leaves a grey finish. It is used in reducing square shoulder pivots of train wheels of small clocks and watches. For the final polish saphirine, or diamantine may be used. The preparation of any of these powders is as follows: Secure a three-section polishing block and use the lowest section for the oilstone powder. Place a small amount of the powder on the metal disk, add a little watch oil, and mix with the blade of a pocketknife to a thick paste. The other powders are prepared in the same manner. The second section is used for crocus and the

top section for saphirine, or diamantine.

GRINDING AND POLISHING SLIPS

The abrasive and polishing mediums as prepared on the polishing block are used in connection with iron, bell metal, and boxwood slips. Iron is used with the oilstone paste, bell metal with the crocus, and boxwood with the saphirine or diamantine. Some workmen use the saphirine or diamantine in its dry condition by merely applying it directly to the boxwood slip.

Iron and bell metal slips are prepared for use by filing the piece crosswise with a medium file. The abrasive material becomes imbedded in the grooves when used. When the grooves become worn, the filing is repeated.

In the treatment of balance pivots, the Arkansas slip may be used for reducing, the jasper slip for additional smoothing of the work, and finally the boxwood slip with the polishing material for the final polish. Steel burnishers are sometimes used to produce a hard surface on train wheel and balance pivots.

Arkansas and jasper slips become worn with use. These can be restored to their original condition by sliding the sides on a piece of ground glass previously covered with a mixture of Carborundum powder and oil.

The Workshop, the Bench, and Working Conditions

Having considered some of the essential points relative to the beginner's tool equipment, let us now take a look at the shop. If windows facing the north are not available, large double-tube fluorescent electric lamps should hang over the bench at a distance of about 8 feet from the floor. In addition to this, the bench should be fitted with a double-tube fluorescent lamp with a long adjustable arm so that the light can be moved in any position. The best possible lighting equipment is important to save the workman's eyes from any extra strain.

The floor should be covered with a light-colored linoleum so as to aid in the finding of watch parts that may be dropped. Right here the student should be cautioned always to have the apron of the bench pulled out while working. All watch-repair benches are fitted with aprons, and the newer benches are provided with an extra wide apron which helps greatly in catching the parts that are dropped or flipped out of the tweezers.

The top of the bench should be of wood, finished in a light color or painted with a white enamel. A bench plate finished in white enamel may be purchased from material dealers. This provides an excellent surface upon which to work. The top of the bench should be kept clean. Wash the bench plate every morning before starting work.

The modern watch bench is well supplied with drawer space. There should be a fixed place for every tool and every tool in its place. The only small tools that may be left on the bench while working are: the bench blocks, eye loupes, tweezers, screw drivers, oil cups, and oilers. Oilers are inserted in pith to keep the tips clean.

The staking tool box is placed in a handy position on the rear, right corner of the bench. The lathe is fitted near the front of the left side. Many horologists belt the lathe directly to the motor, but a countershaft in addition is much preferred.

The other tools used quite frequently should be arranged in drawers that are handy and accessible. Tools used less frequently may be placed in drawers not quite so handy but within easy reach. In other words, the arrangement of tools should be so planned as to make for pleasure and efficiency. An orderly arrangement avoids the possible inconvenience of endlessly hunting for this or that tool, thereby causing confusion and frustration.

The horologist should be supplied with a posture chair, with cushion and an adjustable back. Since the workman spends long hours at the bench, it is essential that satisfactory comfort is provided if peak efficiency is to be expected. The type of chair is important if a tired and aching back is to be avoided.

The above analysis suggests that the horologist, to be successful, must work under ideal conditions — that is, conditions wherein one can remain calm, peaceful, and relaxed. Watch repairing cannot be rushed, and working to some deadline should be avoided as much as possible.

The shop should be well ventilated, cool in summer and comfortably heated in winter. And more important still, the shop should be located apart from the store proper, where there would be little noise and commotion.

Now that the basic considerations have been outlined, we are ready to examine, clean, and repair a clock. This is the subject with which the next chapter has to deal.

PART I

Chapter Two

PRACTICAL CLOCK REPAIRING

THERE ARE SO many different types and grades of clocks that an analysis of repair methods must, of necessity, be quite general. The treatment, however, is entirely practical and, we believe, sufficiently complete to cover all popular types of clocks — the clocks that are found in most homes and offices. The analysis to follow deals with the cleaning and oiling of the popular American mantel clock with counting wheel striking mechanism. The methods outlined apply just as well to the cleaning of French, English, and German clocks, regulator, chime, and grandfather clocks.

Repairs apart from cleaning are given special treatment in later sections of this chapter.

The 400-day clock and the American alarm clock are given separate consideration, inasmuch as these clocks are in a class by themselves.

Cleaning and Oiling the American Striking Clock

Removing movement from the case. Removing the movement from the case is generally a simple matter and, in most cases, too obvious even to call for an explanation. American mantel clocks in wooden cases are so designed that the hands and gong must be removed first. This done, remove four screws that hold the movement in place and lift out the movement. A problem presents itself if one of the mainsprings is broken. In this case wind the good spring fully and pull out first the side that contains the good spring. The movement will, of course, come out with difficulty, but take care to avoid bending the wheels.

Dismantling the movement. Before taking the movement apart, examine the striking train and see if there are marks on the wheel and pinion which perform the function of locking and warning. If there are none, mark with the

graver the point where the wheel gears with the pinion. If this is done, the striking mechanism may be assembled by noting the marks, and the timing remains correct — that is, if it was right before dismantling.

The mainsprings are let down with bench keys, but before doing so place spring clamps over each spring. New mainsprings are enclosed in clamps, and several sizes may be acquired with the purchase of springs. These are saved for future use. Place the key that fits on the square of the winding arbor, release the click, and allow the spring to run down slowly by letting the wooden handle slip between the thumb and fingers.

After the springs are let down completely, examine the freedom of the pivots in the holes in the plates. Noting the condition of wear, remove the top plate and lift out the timing train, keeping the several wheels together. Next remove the striking train and levers and keep these parts together and separate from the timing train. The parts may now be given further examination. See if the pivots are worn or in need of polishing. Next examine the pallets. These usually need polishing, and the work may be done with a Number 0 emery stick. If badly worn, the grooves need grinding out on an emery wheel or Carborundum wheel, afterwards polished on a hard felt buffing wheel charged with rouge.

Determine if the wheels are tight on their arbors. Bent escape wheel teeth are common faults, and every tooth should be examined. The locking pin on the warning wheel is often found to be loose. Broken teeth and broken train wheel pivots are sometimes found as a result of a mainspring breaking. The method of repairing these and other faults will be considered in another part of this chapter. Assuming that the clock is in good condition, we shall proceed with the cleaning.

Cleaning the movement. Some of the cleaning solutions intended for the watch cleaning machines are satisfactory, provided the solution is of a type that may be mixed with water. Fill a large basin with the cleaning solution. Place in the solution the plates, wheels, and other parts, and allow them to stand for several minutes. Brush the parts thoroughly with a rather stiff brush. Sharpen peg-wood to a point and work vigorously in the holes in the plates. Rinse the parts in warm water and shake in warm boxwood sawdust until dry.

The parts may be dried without the sawdust if one has a small electric heater. Place the parts on a large table with the heater nearby. Make certain that the parts, especially the mainsprings, are dry before assembling.

Assembling the clock. Rest the lower plate on a wooden frame and, starting with the first wheels and springs, assemble the wheels in their proper places. It is most convenient, usually, to fit the wheels from the bottom of the movement and work toward the top, fitting the flywheel, the escape wheel, and the pallets last. The tail of the striking hammer should be just free of the lifting pin. The pin on the warning wheel should stand about half a turn away from the stop piece on the warning lever.

Next place the top plate in position and guide the center wheel arbor and first wheel arbors to their holes. Now press the top plate closer and, with the tweezers, guide the pivots of the larger wheels and, lastly, the smaller wheels to their respective holes. Pin or screw down the top plate and test both the striking and timing train for freedom.

Wind the mainspring partly up and oil the several coils with mainspring oil. Oil with clock oil the pivots, the pallet, and every other tooth of the escape wheel. The crutch is oiled at the point where it encloses the pendulum rod.

Fit the minute hand and test the striking. Turn the hand slowly almost to the hour, and see if the warning takes place properly. The warning consists of the release of the warning wheel. The fly turns about one complete turn and stops. When the hand is advanced to the hour, the striking begins, and stops when the counting lever drops into a deep notch in the counting wheel. Test the striking for all hours from 1 to 12 and, if it is satisfactory, set the movement in a wooden frame or shelf and test the running. If it remains satisfactory after a few days of running, fit the movement to the case. Adjust the striking hammer to the gong. Listen to the tick to determine the beat. Adjusting the beat is attained by bending the crutch wire so that the ticks are spaced equally. Now fit the hands and set to time.

The regulating that follows ordinarily requires about two weeks time.

The above account of the cleaning and setting up the clock assumes that we encounter no particular difficulty. More often it is not quite so simple, and the next several pages deal with many of the repair problems usually required in the course of practical clock repairing.

Mainspring Problems

The better quality clocks have going barrels for the reception of the

mainspring. In the going-barrel type of power unit, the spring is wound at the arbor and the barrel carries the first wheel. Mainsprings enclosed in barrels should always be removed for inspection and cleaning. Unwind the spring slowly, allowing the spring to uncoil within the palm of the hand. Mainsprings that are set should always be replaced with new ones, and although the mainspring winder is preferred, it is possible to wind the spring into the barrel by hand without any noticeable distortion. Place a small amount of oil on the spring after it is wound into the barrel, and replace the cap.

Most clocks with going barrels have a riveted hook in the barrel, and the outer end of the spring has a pear-shaped hole that fits to the hook. Occasionally the hook is pulled out and a new one is required. In fitting a new hook, broach out the hole in the barrel to a clean, straight hole. Select a piece of steel wire and turn the hook to the same shape as the old one. Fit the hook from the inside. Place the inside of the barrel on an anvil in such a manner as to hold the hook in place and, with a round-end hammer, rivet the hook in place.

The pear-shaped hole in the end of the spring often pulls out. If the rest of the spring is in good condition, a new hole may be drilled in the end. Break off the outer end clear of the old hole and heat the end until it turns blue. Drill a new hole and file the opening to fit the hook in the barrel. Finish the end of the spring with a flat file, and bend the end beyond the hole to the curve of the barrel wall.

Repairing the Train

Closing holes. Inasmuch as clocks run too long between cleanings, it is quite common that the holes in the plates become badly worn. Since the pressure on the pivot is away from the wheel that drives the pinion, it follows that the wear takes place mostly on one side of the hole. In popular-priced clocks, the hole may be closed with a hollow center punch with half of the end ground away. By fitting the punch to the side of the hole where the wear is greatest, and tapping the punch sharply with a hammer, the metal is worked toward the hole. The punch leaves a crescent-shaped mark on the plate, but this does no harm. Some clock repairers may object to this method as being rather crude. We agree that it should not be practiced on clocks of high quality but see no objection to using it on the cheaper work. The hole should

be closed sufficiently so that the pivot will not go in. Broach out the hole to a free fit for the pivot and try the wheel between the plates for freedom.

Fitting bushings. The worn pivot holes in good quality clocks are repaired by fitting bushings. Bushings, made up in assortments, may be purchased from material dealers, or they may be made from a piece of brass wire. Secure the wire in a lathe chuck, face off the end, and turn a small center in it. Select a drill, slightly smaller than the pivot, place it in the pin vise, and drill a hole about ½ inch deep. Next, broach out the hole in the plate from the inside and to a diameter about three times the size of the pivot. Turn the brass wire so that it just starts in the hole. Polish the graver on a 4/0 emery paper and bright-cut the end of the brass wire. Turn and oil cup to the hole already drilled in the wire. Now cut off the bushing, taking note of the length required to match the thickness of the plate. Drive the finished bushing into the plate flush to the inside and broach out the hole to fit the pivot. The burr made by the broach may be removed with the wheel countersinks.

Pivoting. The repair called *pivoting* is required when pivots are broken off or badly worn. Center the wheel in the lathe chuck. Remove with the graver the portion of the broken pivot and turn a small center. Select a pivot drill slightly larger than the old pivot and place in the pin vise. The drill may be lubricated with turpentine for more successful drilling. The hole should be drilled deeper than the length of the pivot. Select a piece of staff wire or pivot wire and turn it down to fit the hole. The wire should be tapered very slightly. When it fits halfway to the bottom of the hole, draw file it carefully and cut to length. Now file the end flat. Replace the wheel in the lathe and insert the pivot. A few blows with the hammer will fasten the pivot securely in the arbor. The pivot is now turned to size, burnished and polished, and the end rounded slightly.

Fitting Teeth to Wheel

Broken teeth are often found in clock movements but the repair is not difficult. File a slot below the missing tooth to a depth equal to the height of the tooth. Select a piece of brass of the same thickness as the wheel and file to fit the opening just prepared. Insert the piece and solder with soft solder. A convenient method of soldering is to lay the wheel on a copper plate and hold over an alcohol lamp. Caution should be exercised so as not to heat the steel

pivots. A section of an old wheel often serves as material with which to repair the broken wheel. After the soldering, the tooth is filed to the proper shape with needle files.

*Escapement Repairs**

The escape wheel is often worn at the ends of the teeth, and deep grooves may be found in the pallets. Considering first the escape wheel, the worn tips of the teeth may be restored to good condition by grinding down the teeth. Center the escape wheel arbor in the lathe chuck and, while running the lathe at a high speed, lightly grind down the tips of the teeth with an Arkansas slip. Smooth further with a steel burnisher. This treatment reduces the diameter of the escape wheel slightly and may require an adjustment of the pallets to fit the wheel. An excess of inside drop may result, and the correction consists in closing the pallets. The pallets must first be tempered to a blue color and then closed in a vise. Make the correction gradually, testing the pallets to the wheel frequently, until the drops, both outside and inside, are found to be equal. Having found the correction satisfactory, heat the pallets to a cherry red color and plunge into water to restore the original hardness. The worn surface of the pallets are now ground out and polished.

---

* The construction and action of clock escapements are explained in Chapter Four of Part II.

In some cases the pallets or escape wheel may be shifted so that the teeth of the wheel slide on a portion of the pallets that are not worn.

*Repairing the Striking Mechanism**

Counting wheel system. Failure of the counting wheel system to stop striking at the proper time is usually due to incorrect timing. Turn the minute hand to the hour and allow the striking to run slowly. When the counting lever drops into a deep notch in the counting wheel, the drop lever should lock in the cam wheel. If the cam wheel is not in the proper position, the drop lever cannot lock in the notch. Let the mainspring down or insert a watch screw driver through the second wheel and plates to lock the train, and separate the plates on the striking side. Separate the cam wheel from the

wheels next to it and turn the cam wheel to alter the timing. Assemble the striking train and try again.

---

* The construction and action of striking mechanisms are explained in Chapter Six of Part II.

Often the several levers need bending so that the drop lever will drop the necessary distance to engage the cam wheel. There are, of course, many other reasons for striking difficulties. In fact, most jobs will bring up innumerable problems. There are no fixed rules or exact methods. One must have a fair degree of mechanical aptitude to succeed along with plenty of experience.

Rack and snail system. Striking errors in the rack and snail system are usually attributed to worn parts. The hole for the gathering pallet pivot must fit closely. A large hole at this point often causes the gathering pallet to hang up on the rack or fail to gather up the proper number of teeth.

A worn stop piece on the warning lever is shown by the failure of the lever to drop at the hour. The wear mark is easily filed and stoned out and the striking will again function properly.

The several levers of the rack and snail system should be free on the pivots that carry them. This is mentioned because a faulty action may prove to be very puzzling, inasmuch as a tight lever is not easily detected.

Another faulty adjustment, occasionally met with, is the lifting of the striking hammer when the clock warns. This results in a lot of useless run after the striking is completed. There should be very little run after the striking and no lifting of the striking hammer during the warning. Correct adjustment lessens the probability of the clock's failing to strike when the oil gets thick.

Repairing Broken Hands

Hands often become broken near the center, but this presents no problem in the newer standard makes of clocks, as new hands can be purchased. However, hands for French clocks and antique clocks cannot be purchased and must be repaired or made completely. The following method for repairing is suggested:

In the French clocks a brass collet is fitted to the center of the hands. This

collet is removed from the broken piece. Now select a small piece of flat steel of about the same thickness as the hand. Drill a hole in it and enlarge the hole to fit the collet. File the steel piece to the shape shown in Figure 1. The width of the narrow part should be left a little wider than the hand and about half as long. Next fit the collet to the piece, but make certain that the end points toward 12 to insure correct striking, and rivet securely. Now apply a little soldering flux and soft solder to the steel piece. With the tweezers, hold the steel piece and the broken hand together firmly and heat over an alcohol lamp until the solder melts. Finish by filing or grinding the surplus steel away. Clean the hand and, when fitted to the clock, the repaired hand will be found to work as well and look as good as the original hand before it was broken.

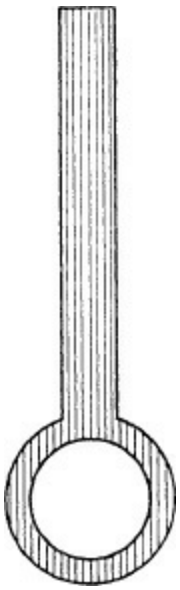

Figure 1.

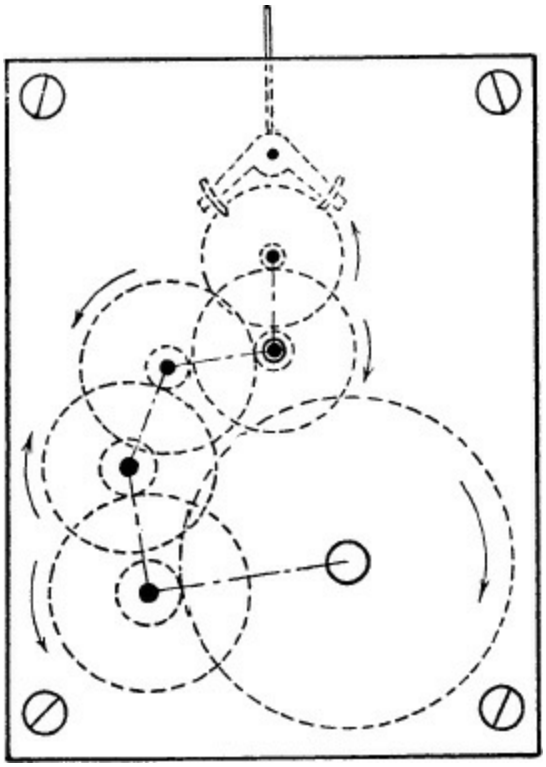

Figure 2. Movement of the 400-day clock.

Repairing 400-Day Clocks

The 400-day clock is often referred to by other names, for example: annual wind clocks, and anniversary clocks.

Instead of a pendulum it has the equivalent of a balance wheel suspended at the end of a flattened wire of steel or phosphor bronze. Designed as they are to run a year between windings, it will be noted, Figure 2, that there are three intermediate wheels. The barrel makes one turn in 80 days and the balance makes 8 vibrations a minute or 7½ seconds for each vibration. Exceptions may be found in some of the older models.

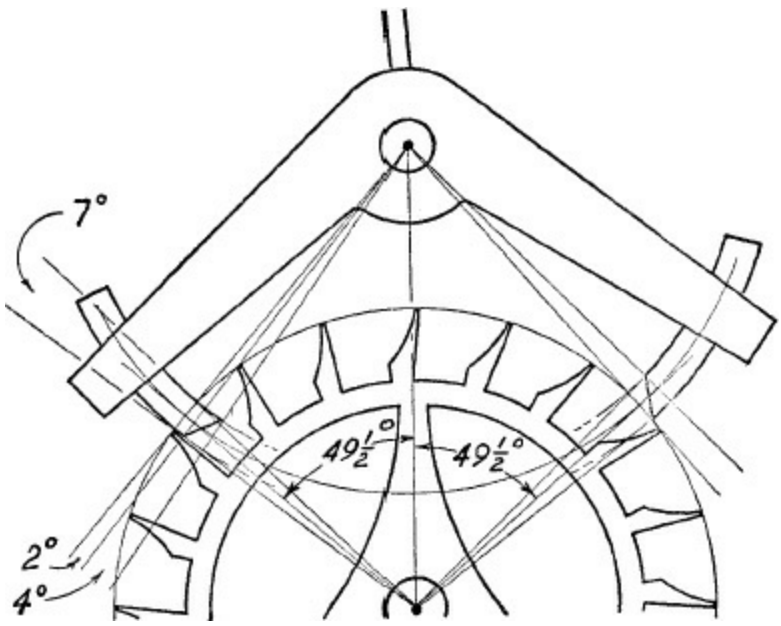

Figure 3. Escapement of 400-day clock.

The escapement is of the dead-beat type similar to the dead-beat escapement described in Part II. Some are made with adjustable pallets as shown in Figure 3, while other makes use pallets of one-piece construction. Lying above the pallet frame is a round wire about 1½ inches long called the *pallet pin*, the upper end of which plays freely between the *fork F*, Figure 4.

The fork is secured to the suspension wire *S*. When impulse is delivered to the fork, the suspension wire is twisted and the force is carried to the balance. When the wire is twisted, the balance is raised slightly; thus two forces are present: (1) the tension due to twisting and (2) a slight pull of gravity.

The cleaning and oiling does not differ greatly from any other type of clock, but the adjustment of the escapement, the fitting of new suspension wires, and regulating do present new problems. Suppose the clock is set up and running. The locking of the escapement should be equal and this may be noted by observing the sliding action of the pallets along the face of the escape wheel teeth immediately after locking. If the locking is not equal, it may be made so by turning the block that supports the upper end of the suspension wire. This piece is fitted friction tight in the plate *P*. However, before adjusting the block *B*, it is well to inspect the suspension wire for bends or kinks that may lie about the fork.

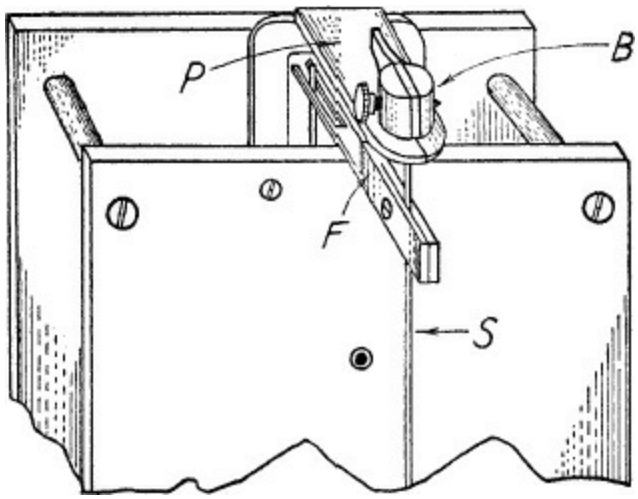

Figure 4.

Suppose a clock for repair has a broken suspension wire. These wires may be purchased from material dealers. Using a metric micrometer, select a wire that measures closely to the old one, if available, and fit the end pieces. With pliers hold the upper end and fit the balance to the lower end. Give the balance a slight turn and, while holding the assembly above the bench, count the vibrations for ½ minute. Four vibrations should be counted and, if not, continue to change wires until one is found that vibrates closely.* When a wire with close rating is found, set up the clock and regulate to time.

---

* Some of the older models may not vibrate to 8 beats a minute. To determine the number of vibrations count the teeth of the center wheel, the leaves of the escape pinion, and the teeth of the escape wheel. Divide the number of leaves of the escape pinion into the number of teeth of the center wheel. Multiply the quotient by twice the number of teeth of the escape wheel. The answer is the number of vibrations of the balance per hour.

The 400-day clocks are becoming increasingly popular of late. They are a delightful novelty, the movement is exposed, and the entire operation can be observed. Unfortunately, the clocks are not good timekeepers. A rate within 2 or 3 minutes a week is about the best that one can expect.

The American Alarm Clock

Repairmen generally do not like to work on popular-priced alarm clocks. Owing to their low cost, it is not practical to go into extensive repairs. There

are a few points, however, that should be observed and, in most cases, the popular-priced clock can be restored to good running order at a minimum cost of time.

Dismantling the clock. The first act is to remove the time-winding and alarm-winding keys that are located at the back of the clock. Arrows indicate the direction the keys are turned to wind. To remove, turn the keys in the opposite direction, as most keys are screwed on. In a few cases the keys are fitted friction tight to a square on the arbor. If this is the case, insert the jaws of cutting pliers under the keys and pry off. Usually the movement may be removed from the case without disturbing the time-setting and alarm-setting knobs, as the holes in the back plate are large enough to permit the knobs to go through. Removing the movement from the case differs according to the make of the clock. A quick examination should determine this. In most alarm clocks the bezel is pried off and three or four screws at the back are removed. The movement is then lifted out for examination.

Place a mark on the outer coil of the balance spring at the point where the spring is secured to the stud. Remove the brass wedge to release the spring. With the pliers back out one of the threaded steel cups that carry the balance staff and remove the balance from the movement. Examine the pivots of the balance staff. The ends of the pivots should feel sharp when touched with the finger. If they are not sharp to the touch, they must be made so. Assuming that the correction is necessary, first mark the balance showing the position of the outer end of the balance spring. Next remove the balance spring by forcing the tapered sides of the tweezers under the collet. Place the staff in a split chuck and grind the pivots to a sharp point with an Arkansas slip and oil. Finish with a steel burnisher. Now reverse the staff and prepare the other pivot in like manner.

Cleaning the clock. With the balance out of the movement, it is an opportune time to clean, but first remove the hands and dial. White gasoline or benzine is satisfactory for cleaning. Place enough in the jar to cover the movement and place the movement in the jar. Allow to stand for 10 or 15 minutes. Next select a brush with rather stiff bristles and, dipping it in the gasoline, brush the movement thoroughly, particularly around the pivots and the circumference of the escape wheel. The escape wheel often needs additional attention, as there is a tendency for the pallet pins to force dirt to the base of the teeth. This does not apply to those clocks fitted with banking

pins, but the pin pallets are not usually equipped with banking pins. The dirt is, therefore, built up and lessens the angular motion of the lever, possibly to the point of eliminating the guard freedom. Ordinary cleaning may not remove this dirt, which is often caked on hard; so scrape the base of the teeth with a sharp instrument that can be inserted between the plates. Rinse the movement up and down in cleaning solution; dry it on a clean sheet of paper.

Now clean the balance with the brush, dipped in gasoline; rinse in warm water, dip in alcohol, and dry in warm sawdust. The balance spring is cleaned in like manner, except, of course, it cannot be brushed.

After the parts are dry, replace the balance spring to the correct position on the balance. The mark previously made on the balance shows the proper position. Adjust the threaded steel cups to permit a small freedom for the staff. Place the spring between the regulator and wedge in the spring at the stud, noting the mark previously made. If the escapement is not exactly in beat, insert a screw driver in the slot of the collet, and turn the balance in the desired direction. It is understood that the escapement is in beat when the balance spring is at rest and the impulse pin points directly toward the pallet center.

Oiling the movement is next in order. Wind the time and alarm springs fully, and place clock oil or mainspring oil on the coils. Oil the train wheel pivots, the balance pivots, and every other tooth of the escape wheel, also the alarm pallets. The balance should now start with a brisk motion of not less than one turn.* If it does not, we must look further for other faults.

---

* See page 258 for an analysis of balance motion.

Adjusting the escapement. If the balance does not take a satisfactory motion, the escapement may be at fault. Turn the balance slowly until such time as to allow one tooth to pass a pallet pin. The escape wheel will turn and another tooth will engage the opposite pallet pin. There should be a definite locking as shown in Part II, Figure 27, but we do not always find it so. Instead we may find an error wherein the pallet pin fails to lock, and, if this is the case, the pallet pin will engage the impulse face of the tooth. Using long, flat-nosed pliers, the correction consists in bending *in*, toward the escape wheel, the narrow projection of brass in which the pallet arbor is fitted. Bending the pallet arbor tongue puts the pallets slightly out of upright, since

the opposite end usually has no such means of adjustment. This, however, is not objectionable in clocks of this quality. The only additional adjustment is bending lever to line up fork slot to impulse pin.

Fitting pallet pins. If the pallet pins are worn, new ones must be fitted. Let the mainspring down and remove the lever from the movement. Since the pins are fitted in by friction, it is only necessary to lay the lever on the bench block and drive out the pins. Ordinary sewing needles of the correct diameter are well adapted for new pins. Cut the needles to the required length, finish the ends, and drive in place. Since the needles are highly polished, no further finishing is necessary.

Adjusting the alarm. On the dial side of the movement lies a long flat spring with a bent-over end that reaches through a hole in the plate. The bent-over end locks or releases a lever (locking lever) which permits the alarm to function at the desired time. When turning the alarm setting knob, one can readily see what happens and the necessary adjustment can be made. If the bent-over end does not rise high enough to release the locking lever at the moment the alarm should ring, bend the locking lever back slightly. If the alarm rings constantly, move it forward.

Replacing the hands. Turn the alarm setting knob slowly and stop the instant the clock alarms. Fit the alarm indicator hand to 12 o'clock. Fit the hour and minute hands to 12 o'clock also. Next, turn the time setting knob forward, clockwise, and check the time when the clock alarms. If the alarm does not take place at 12 o'clock, readjust the hands until the clock alarms at the proper time.

It sometimes happens that the alarm setting knob and hand turn when the clock is set to time. This should *not* take place and indicates a lack of sufficient friction in the alarm setting mechanism. Many clocks have a nut that may be tightened to correct the fault. In some cases, the alarm setting knob needs to be removed to make the adjustment.

PART I

Chapter Three

PRACTICAL WATCH REPAIRING

MODERN high-grade watches are a marvelous example of man's skill in the making of a precision instrument. We must add, also, that to become an efficient repairman, the same skill is required. It takes years of hard work to perform satisfactorily the many delicate operations. Moreover, as the student masters each theoretical principle and technical problem, he will find that the work becomes more and more fascinating and presents new opportunities of spreading out into other fields of intellectual interest. There is probably no other instrument that performs a single function which makes use of so many laws of physics as does the compact little mechanism that is wrapped up in a watch case.

Cleaning and Oiling

Removing movement from case. The best method we believe, to learn watch repairing is to start on the watch itself, taking it apart, piece by piece, examining each part carefully and noting the function and purpose of every piece. Obviously the first step is to remove the movement from the case. It looks simple enough, but certain procedure must be observed to avoid the breaking of parts.

The tools needed for the work will be mentioned as we proceed. At the very start we need a pair of tweezers, a 3-inch eye loupe, a set of watch screw drivers, a movement holder and a case opener.

The construction of cases varies considerably and we shall consider the more popular types and the methods of removing the movement from the case. Most cases, both pocket and wrist, have a back and a bezel (front which contains the crystal) that snap on. These are pried off in the manner shown in Figure 6. Release the click, Figure 7, and let the mainspring down by

allowing the crown to slip slowly between the thumb and first finger. Next, place the watch, train side up, on the bench and back out the screw *SS*, Figure 5, a couple of turns. This releases the stem, which may now be pulled out. Now remove the case screws and push out the movement.

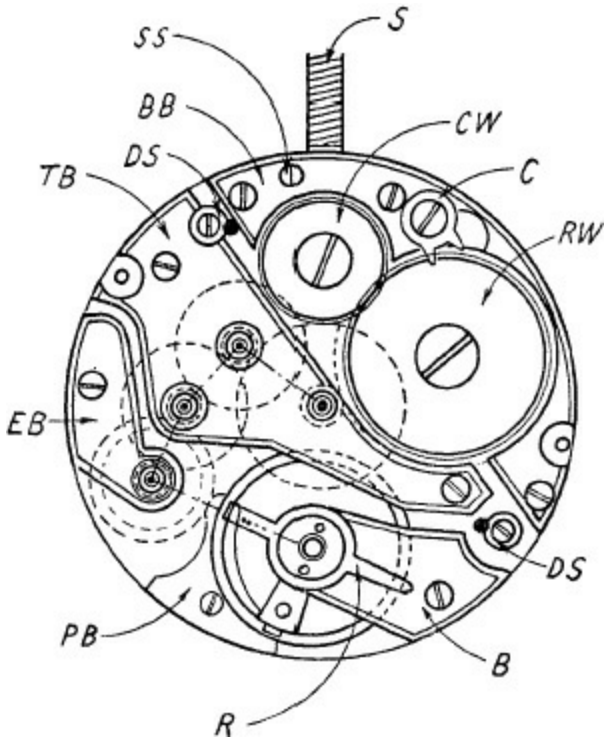

Figure 5. Swiss watch movement. S—stem; SS—setting lever screw; BB—barrel bridge; DS—dial foot screw; TB—train bridge; EB—escape wheel bridge; CW—crown wheel; C—click; RW—ratchet wheel; B—balance bridge; R—regulator; PB—pallet bridge.

Some of the older American watches are not designed in this manner. Instead of backing out a screw, pull the stem out to the position of setting the hands, remove the case screws and push out the movement. The crown, stem, and sleeve remain in the case except when the replacement of these parts become necessary.

Many modern wrist watch cases are of the two-piece construction. Pry off the bezel with the case opener. Then lift out the movement with a large watch screw driver by twisting the blade. Make certain that the screw driver is not inserted at the point where the balance is located.

Recent years have seen the development of water-resistant cases and these require an assortment of wrenches and special tools to open the cases. As with the three-piece case, the stem must be removed before the movement

can be taken from the case.

Another type of water-resistant case is opened by prying off an unbreakable crystal. In these, the stem is pulled out with cutting pliers.

There are other types, too, which have a case opened by pressing down on the crystal, thereby releasing the back. Still others are held together by screws or slides. A little study will usually determine the method required to open the case. In the event of doubt as to the method, proceed with caution.

Dismantling the movement. Place the movement, train side up, in the movement holder, replace the stem, and tighten the screw SS, Figure 5. Remove the balance from the lower plate and release the balance spring from the balance bridge. Place the balance on one of the holes of the bench block. Never lay the balance on the bench, either before or after cleaning. Placing the balance on the bench block avoids possible damage to the balance pivots and after the balance is cleaned, the pivots remain clean. Remove the several parts of the watch in the following order: (1) the hands, using the hand remover; (2) the dial; (3) the hour wheel and minute wheel; (4) the cannon pinion using the cannon pinion remover; (5) the pallet bridge and lever, but make certain that the mainspring has already been let down; (6) the ratchet and crown wheels; (7) the train bridges; (8) the barrel bridge; and, lastly, the train wheels and mainspring barrel. These parts are shown in Figures 8 and 9.

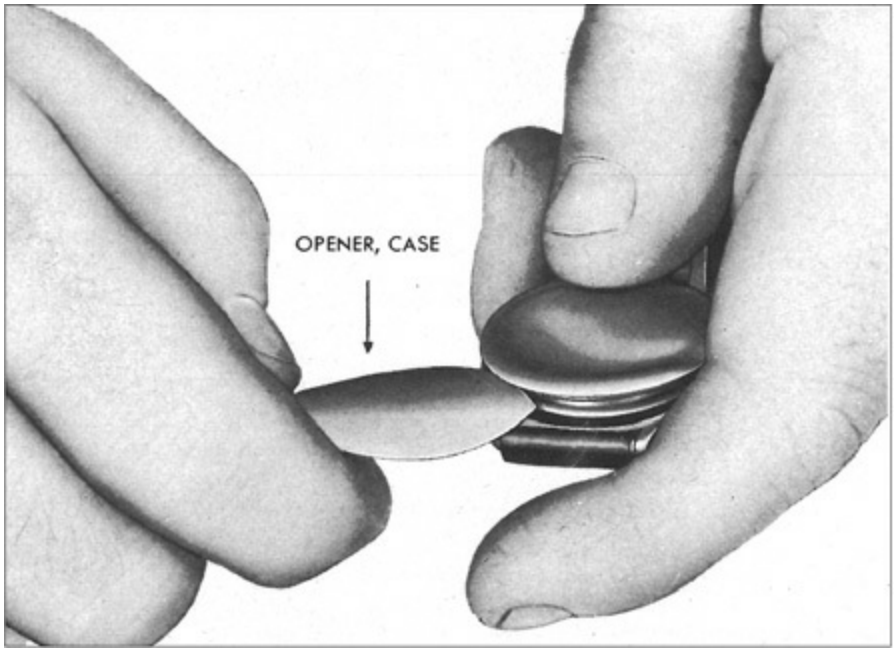

REPRODUCED BY THE PERMISSION OF THE DEPARTMENT OF TUB ARMY
Figure 6. Opening case with the case opener.

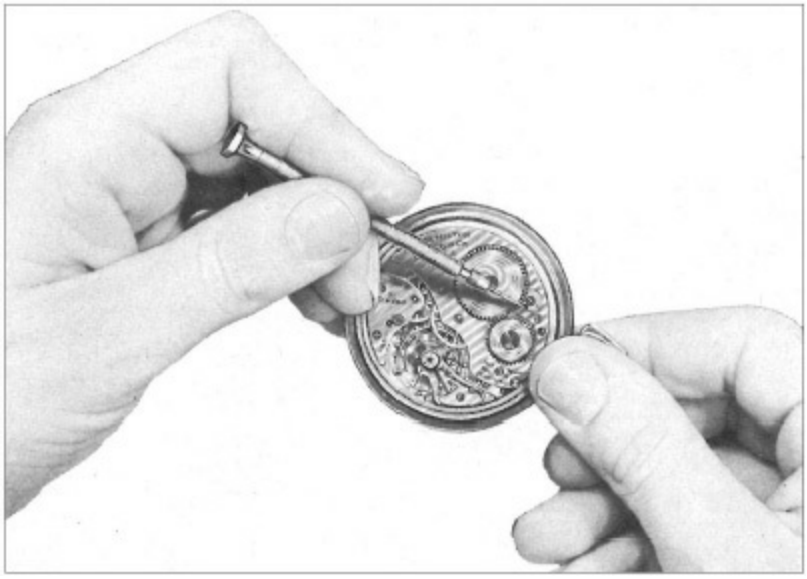

REPRODUCED BY THE PERMISSION OF THE DEPARTMENT OF TUB ARMY
Figure 7. Releasing power of the mainspring.

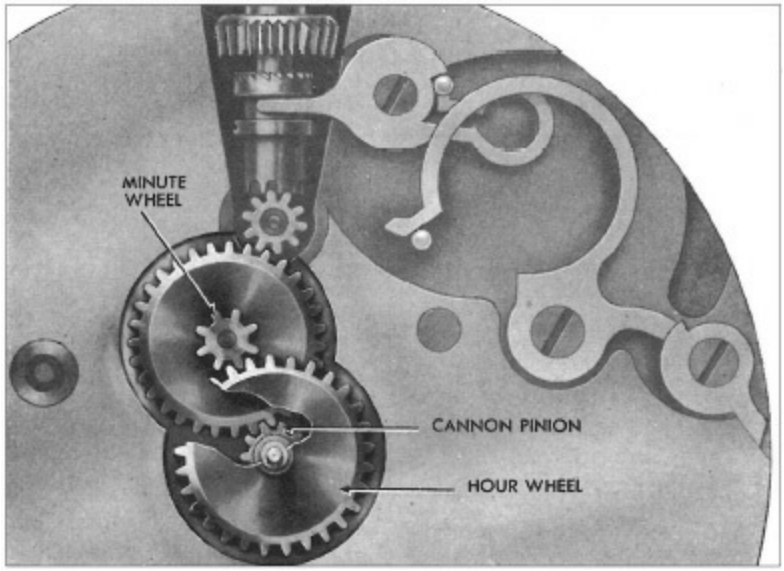

REPRODUCED BY THE PERMISSION OF THE DEPARTMENT OF TUB ARMY
Figure 8. Watch movement showing the dial train.

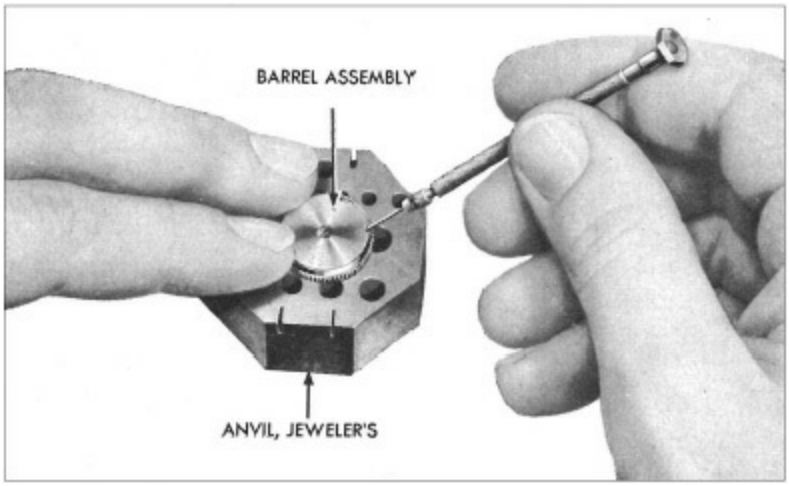

REPRODUCED BY THE PERMISSION OF THE DEPARTMENT OF TUB ARMY
Figure 9. Removing mainspring barrel cap.

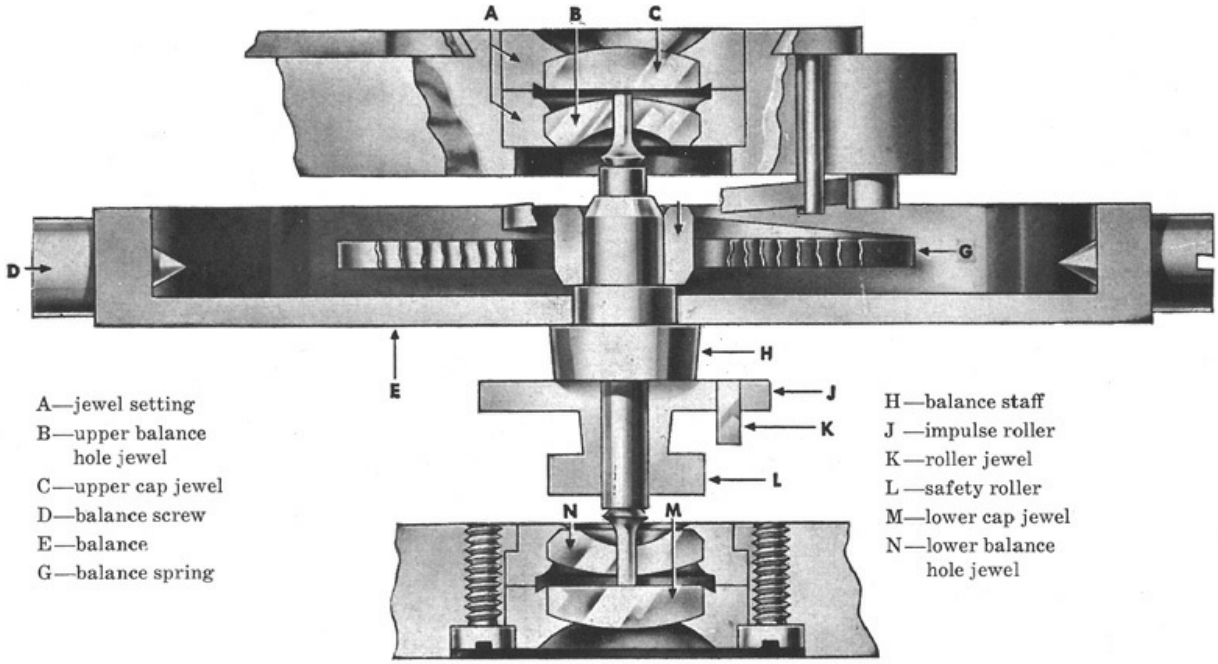

REPRODUCED BY THE PERMISSION OF THE DEPARTMENT OF TUB ARMY
Figure 10. Typical balance assembly.

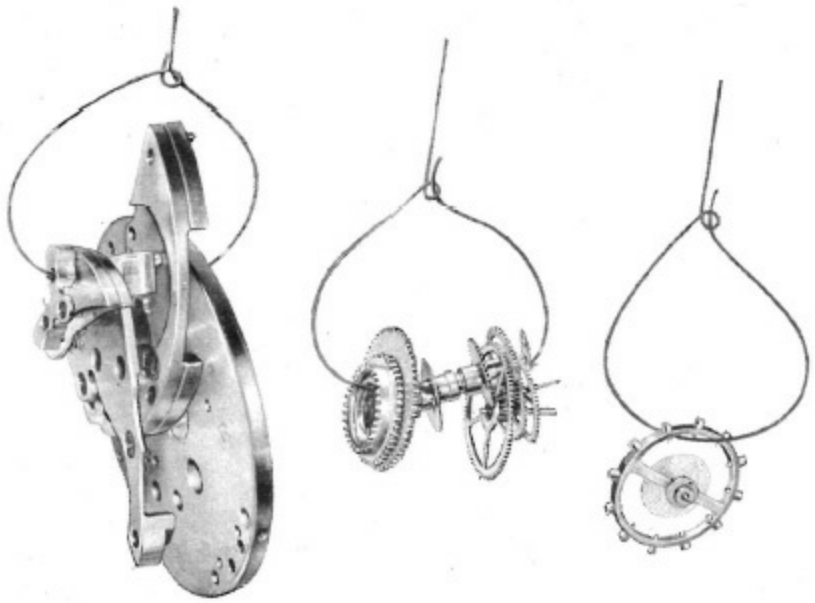

REPRODUCED BY THE PERMISSION OF THE DEPARTMENT OF TUB ARMY
Figure 11. Watch parts strung on wires for cleaning.

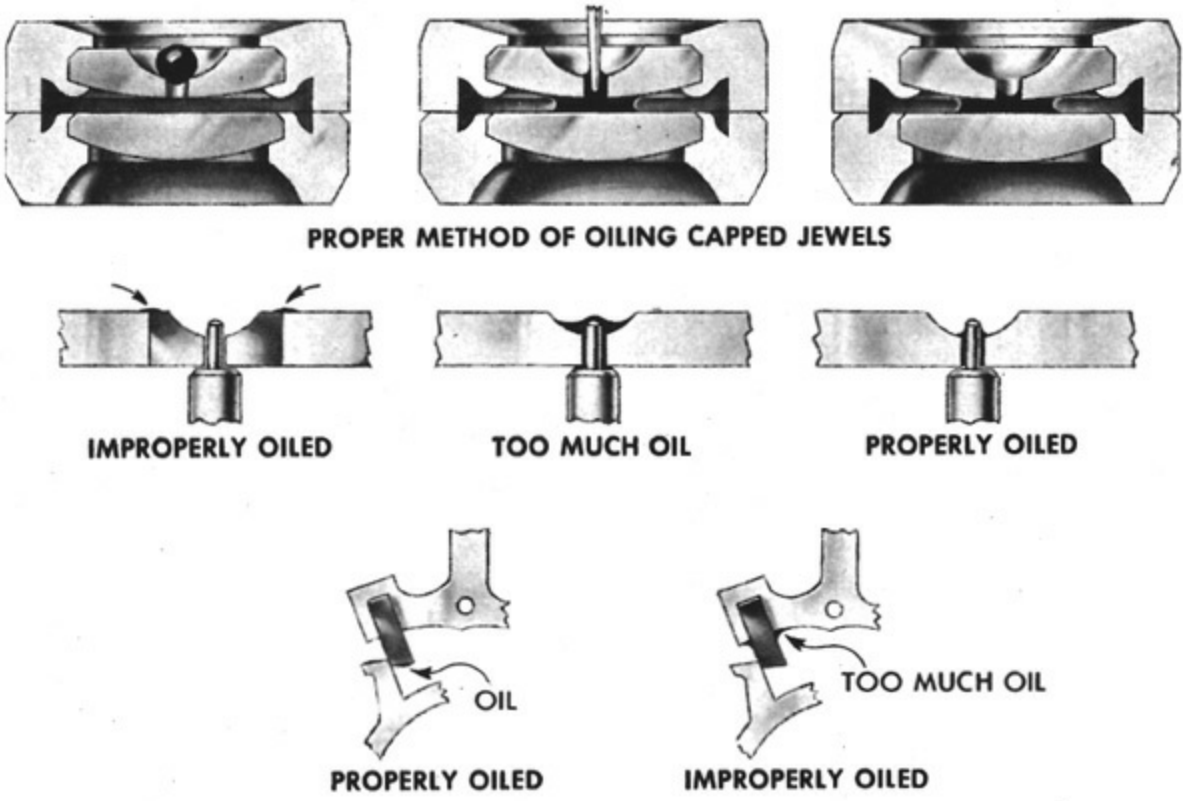

REPRODUCED BY THE PERMISSION OF THE DEPARTMENT OF TUB ARMY
Figure 12. Proper and improper oiling.

Lay the barrel, cap side up, on the bench block (you need two bench blocks) and, with a small screw driver, Figure 9, pry off the cap. This should be done with caution, as the arbor and mainspring may fly out suddenly and you will spend the rest of the day, or perhaps tomorrow, looking far and wide for a barrel, a barrel cap, a barrel arbor, and a mainspring. Trusting that you are not so unfortunate, carefully remove the arbor with heavy tweezers. Turn the arbor so as to unhook the mainspring and remove the arbor. Now remove the mainspring.

The balance is supported on each end by a hole jewel and a cap jewel, Figure 10. This arrangement is necessary to reduce friction. Cap jewels are always removed in cleaning and if these are fitted to the lever and train, it is preferred to mark the jewel settings and the plate before removing so that they may be replaced to their original positions.

Cleaning the watch. The lower plate and bridges are strung on a looped wire, Figure 11, and emersed in a jar containing a watch cleaning solution that may be purchased from material dealers. Allow the parts to stand a few minutes in the solution; then brush thoroughly with a soft brush previously dipped in the cleaning solution. Rinse in warm water, and dip in alcohol or a special drying solution that may be purchased at material dealers. Shake the parts in warm boxwood sawdust until dry. The wheels are strung on the wire separately and cleaned in the same manner. The mainspring may be used again if it is not *set.* (The term *set* implies that the spring has lost its elasticity.) A spring should open to a diameter about three times that of the diameter of the watch movement. If it does not, a new spring should be fitted. Clean the mainspring as with the other parts and wipe dry.

The small pieces that cannot be strung on the wire, such as the lever, jewels, and screws, are placed in a shallow container filled with the cleaning solution. These are removed, one at a time, with special tweezers so shaped that the small pieces such as the jewels will not fly away. With the same tweezers, hold the jewels against a piece of hard pith and clean with a brush previously dipped in the cleaning solution. Clean the lever and other small parts in like manner, dip each piece in a drying solution, and place on a sheet of paper to dry. The jewels are further cleaned by twisting a pointed piece of pegwood in the hole. The cap jewels are cleaned by rubbing with a piece of pegwood that has been flattened at the end.

The balance must be cleaned separately. Work the pivots into a piece of

hard pith and examine with a ½-inch eye loupe. If they are smooth and highly polished, proceed with the cleaning by dipping in the cleaning solution, next a drying solution, and finally shaking in sawdust until dry. If the balance pivots are tarnished, cyanide of potassium may be used, but clean thoroughly after dipping in the cyanide. WARNING: Cyanide is a deadly poison. If the pivots are badly corroded, polish in the lathe according to the procedure explained in another part of this chapter.

Assembling the movement. The watch has now been cleaned and an examination shows that the parts are in good condition. Replace the cap jewels and oil each hole jewel with watch oil. Insert a small wire, Figures 12 and 13, in the hole jewel so as to force the oil through to the cap jewel. Examine the cap jewel with a pivot eye loupe and note the size of the oil bubble. Usually more oil needs to be added to increase the bubble to the required size. Figure 14 shows the correct size. The oil bubble is not always concentric to the hole in the jewel. A slight eccentricity as shown in Figure 15 does no harm. If the bubble is badly eccentric as in Figure 16, we have a condition where the cap jewel or hole jewel is out of flat and must be corrected. In a few cases an oil bubble of the proper size will not form. This indicates that the jewels are too far apart and this, too, calls for correction. Too much oil is shown if the bubble fills the entire cap jewel. In this case, remove the cap jewel, and clean and replace the jewel. The correct amount of oil is important if the watch is to function for a normal period between cleanings.

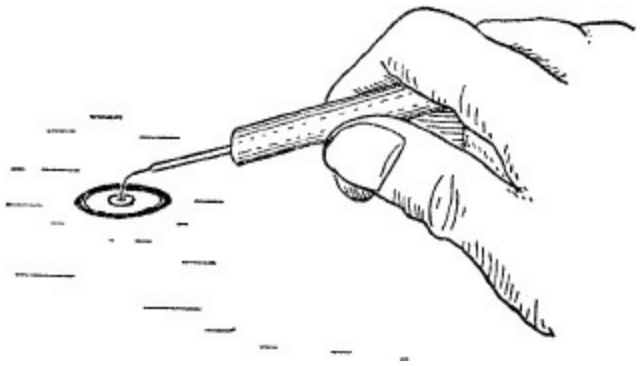

Figure 13. Oil pusher. A pivot broach, ground to fit freely into the hole of a small hole jewel and fitted to a piece of pegwood, makes an excellent instrument to push the oil through to the cap jewel. Useful, also, to test escapement freedoms.

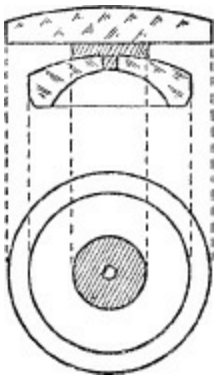

Figure 14.

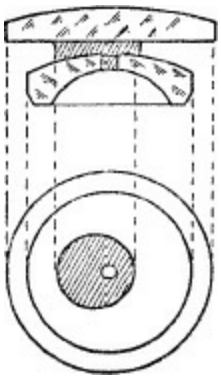

Figure 15.

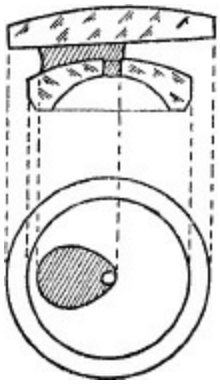

Figure 16.

Next fit the balance to the lower plate and see if the balance spring is flat, level, and concentric to the staff. If it is not satisfactory, correct according to instructions given in another part of this chapter. Assuming that the spring is correct, remove the balance and bridge and place on the bench block.

Oil all frictional surfaces of the winding mechanism. Using a mainspring winder, fit the mainspring to the barrel. Oil with watch or clock oil.

Force the pinion end of the escape wheel into a piece of hard pith and oil every other tooth of the escape wheel. Place the barrel and the train wheels on the lower plate and fit the bridges, being certain that the wheel pivots are in the hole jewels before the bridges are screwed down. Try all wheels for end shake. The fourth, third, and center wheels should show more end shake than the escape wheel, but none should be excessive. Now fit the lever to the movement and oil the train jewels. Wind the mainspring fully and test the lever for freedom. This is done by lifting the lever away from the banking pin against which it leans. If it is free, it will jump quickly to the opposite banking pin. Place the balance in the watch and, if there are no basic faults present, the balance will take a good motion.

THE WATCH-CLEANING MACHINE

The well-equipped shop now uses the watch-cleaning machine. There is no doubt that the machine does a superior cleaning job and has the further advantage of eliminating the use of sawdust. The machine consists of an electric motor to which is attached a basket for the watch parts and three or four jars for the cleaning and drying solutions.

The watch is dismantled in the usual manner and the parts are placed in the basket, the larger parts in the bottom and the smaller parts in several small spaces in the top. After you have cleaned the pivots in hard pith, the balance is placed in one of the small spaces in the top. To assure no injury to the balance spring, a small piece of tissue paper is crushed into a ball and placed over the balance.

Lower the basket into the jar containing the cleaning solution and allow the motor to run for several minutes at a moderate speed. Throw off the cleaning solution by raising the basket sufficiently to clear the solution. Lower the basket into a jar containing a rinsing solution and rinse off the cleaning solution. Raise the basket sufficiently to clear the solution, as before, and throw off the solution. Next, lower the basket into a second rinsing solution and repeat the operation. Finally, allow the basket to spin in a receptacle containing a small heater for a quick drying of the watch parts. Thus the cleaning job is completed.

Mainspring Problems

Mainspring gauges. There are two systems in use for measuring

mainsprings. These are the Dennison and the metric. It is our opinion that the metric is more satisfactory, as it permits closer measurements. A metric micrometer may be used to determine the thickness, and the vernier gauge for the width.

Swiss mainsprings. Swiss mainsprings are generally fitted with a tongue end as shown in Figure 17. These springs sometimes fail to hook in the barrel. The difficulty can usually be corrected by shaping and filing the end of the tongue as shown in the illustration. If this fails, undercut the step in the barrel with a sharp, long-pointed graver. See that the bottom of the step is not rounded. Often there is a punch mark on the barrel to indicate the position in which the cap is snapped into place. Taking note of this factor may save the horologist considerable trouble, for the barrel may not run true in the flat unless the cap is properly fitted.

Fitting hook to barrel. The hook in the barrel is sometimes faulty or broken and needs replacing. In making a new hook, there are certain details that should be strictly observed. These are: (1) The hook must be strong enough to resist all strain when the spring is completely wound. (2) The hook should hold the spring securely against the barrel wall. (3) The hook should be as narrow as possible, permitting the use of a narrow hole in the spring and thereby realizing a greater strength at that point.

There are several methods for making a hook. We shall describe one which we believe is as satisfactory and as simple to execute as any. The procedure is as follows: Drill a hole in the barrel at such a distance from the cap as to be perfectly centered to the inside of the barrel. Thread the hole with a small tap. Next, using a pin vise, file a piece of soft steel wire to a slight taper. On this wire make a thread with the screw plate to the same size as the thread in the hole in the barrel. The threading will take place at the larger part of the taper. Continue until a full thread is cut; then cut off the wire, leaving sufficient height to file the hook to shape while the wire still remains in the screw plate. Having filed the hook, remove the wire from the screw plate and screw into the barrel from the inside. Tighten securely by means of that part of the wire that sticks through the outside of the barrel. Cut off the wire and finish level to the barrel with a small escapement file.

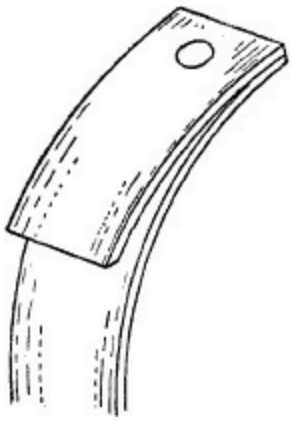

Figure 17.

The hole in the outermost end of the spring should receive the same thorough attention as given to the hook. Do not blue the end of the spring farther back than necessary. Punch the hole as near as possible to the hard part and leave about 2 millimeters of the spring beyond the hole. This part beyond the hole is curved slightly to conform to the circle of the barrel wall. The hole should be just wide enough to fit the hook freely, and that portion of the hole near the end of the spring should be beveled to keep the outermost coil tightly against the barrel wall.

Fitting cap to barrel. There are times when the barrel cap will not stay in place. For this problem, the following is suggested: Lightly file the circumference of the cap. The glazed surface is thus roughened and the cap will usually remain in place.

Fitting Stems

When the factory stem is available for a particular model of watch, no fitting is required other than shortening the stem to bring the crown to the correct height. However, the correct stem is not always available and more or less fitting is required. There are cases, too, where the plates are badly worn and stems with oversize hubs are needed.

Having selected a stem that approximates the required size, first determine the size of the pivot. This can be found by inserting a small drill in that bearing intended for the pivot. The pivot is now turned to the required size and the hub is next turned to size. Reduce the square with an escapement file. This is accomplished by holding the stem in a pin vise and using an eye

loupe as the filing takes place.

Removing Broken Screws

The removing of broken screws is often very annoying. Sometimes the piece remaining can be pushed around with a well-sharpened graver. There are times when a slot can be filed with a screwhead file and the piece removed with the screw driver. If these methods fail, make a solution of alum with about one part alum to five parts water. Stir thoroughly. Remove all steel parts and submerge the plate or bridge in the solution, allowing the piece to remain submerged for about twelve hours. The screw will be dissolved but the plates, which are made of brass or nickle, are not injured. In some cases twenty or more hours are required.

Repairing the Main Train

Closing holes. Closing holes in the plates and bridges of watches and clocks is an almost daily task of the horologist. If the holes are not badly worn, this can be done satisfactorily with the staking tool. Select a flat-faced stump that fits freely in the recess of the plate or bridge and place it in the die of the staking tool frame. Using a round-end punch that fits the oil cup, tap the hole just enough so that the pivot will not go in. Broach out the hole to a free fit. Next fit the wheel between the plates and observe carefully the end shake. The end shake should be about one third the diameter of the pivot. Suppose the end shake is too great. If the watch is fitted with friction bushings, these can be shifted by means of the friction jeweling machine. The manner of using this device is explained in the section covering friction jeweling. If the plate is not fitted with friction bushings, the most suitable method of altering excessive end shake is to make or remodel a stump by turning a slight hollow on its face. When the hole is closed as described above, the metal in the plate will sink into the hollow of the stump, thus decreasing the end shake. A number of such stumps of varying sizes and depths will be found convenient. On the other hand, if the end shake is wanting, the reverse procedure is required.

The wheel should spin freely between the plates, and this freedom should be equal in both the dial-up and dial-down positions.

Often the holes for the escape wheel and lever are worn beyond repair

and, since the horologist of today can take advantage of friction jeweling, it is a simple matter to broach out the holes to the required size and push friction jewels in place. Friction jeweling is described in detail in the next section.

FRICTION JEWELING

The use of jewels as bearing for watches is, without question, one of the most important achievements to the attainment of precision timekeeping. Nicholas Facio, an Italian residing in London, successfully applied jewels to watches about the year 1704. The system used by Facio was not the same as employed in making the jeweled bearing of today. Instead of a hole piercing a jewel, a V-shaped depression was ground into the jewel. The pivot was pointed and worked into the depressed jewel in much the same manner as in the present-day alarm clock. The Swiss were quick to realize the advantages of jeweling and began experiments which finally resulted in the making of jewels as we find them today.

For many years, jewels were set in a recess and burnished in to make secure. These were called *bezel-type jewels.* Since 1920 friction-type jewels have been used and at the present day the bezel type may be regarded as obsolete.

Replacing a bezel-type jewel with a friction jewel. In fitting a friction jewel, the first act is to determine the depth the jewel is to be set to give the proper end shake. This is accomplished by using a machine made especially for the job. There are many different makes on the market, but in all makes the operation is the same. Rest the *pusher* on the broken jewel and adjust the metric screw near the top of the machine so that the new jewel may be forced to the same depth as the broken one had been. Next push out the broken jewel and ream out the hole, Figure 18, with the smallest reamer that will cut away enough metal to give to the plate a clean, straight hole. Now select the proper jewel, the outside diameter of which is $^{1}/_{100}$ of a millimeter larger than the hole in the plate. The size of the hole is shown by the stamping on the reamer which was last used. Remove the burr left by the reamer with the wheel countersinks. Lastly place the jewel, bottom side up, over the hole in the plate. It should enter slightly without the aid of the machine. Lower the pusher to the jewel and, with a firm pressure, push the jewel in place, Figure 19. The metric stop, previously adjusted, will arrest the movement of the pusher when the proper depth is reached.

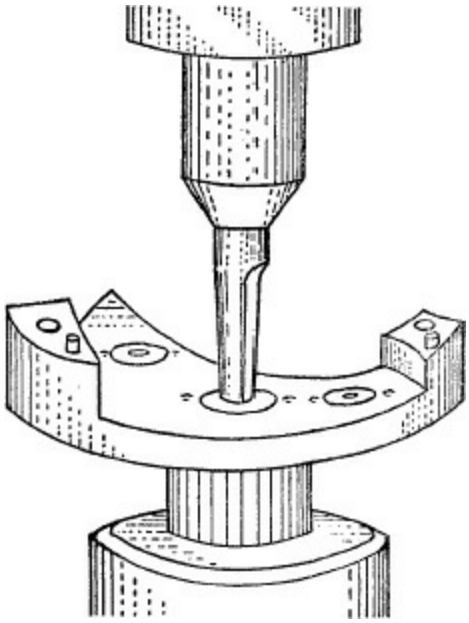

Figure 18.

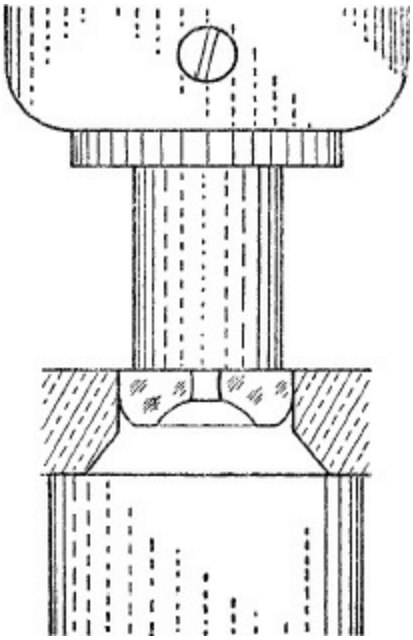

Figure 19.

Replacing a friction jewel. To replace a jewel in a watch that had a friction jewel in it before, it is necessary only to measure the size of the hole in the plate. This may be done by inserting the reamer or using a special gauge that is available for the purpose. Having determined the hole size, select the jewel required and push in to the proper depth.

Fitting jewel in removable setting. If we wish to fit a jewel in a setting that may be removed from the plate, as in the case of a balance or cap jewel, we need special tools to hold the setting while the reaming takes place. There are various types of tools on the market, all of which are used in connection with the friction jeweling machine.

POLISHING PIVOTS

Train wheel pivots. Cracked jewels or dirty pivot holes often cut the pivots so badly that a new wheel is required. In some cases, as with a center wheel, the pivot may be reduced and repolished. This usually requires the fitting of a smaller hole jewel or bushing or, perhaps, closing the hole.

Suppose the short pivot of the center wheel is in need of repair. Place the pinion in a split chuck and make certain that the pivot to be corrected runs true. With a well-sharpened graver, turn down the pivot until it is straight for its entire length. The point where the shoulder and the pivot meet must not develop a round corner. This may be prevented by keeping the point of the graver sharp. Next, cross-file on two sides an iron slip and, using oilstone powder and oil, grind the pivot to a grey finish. Finish further with a steel burnisher. Cross-file a bell-metal slip and polish with diamantine and oil.

Balance pivots. In repairing a damaged balance pivot, the procedure is slightly altered. Suppose a balance pivot is burred. Reduce the cylindrical portion with a jasper stone, touch up the end of the pivot, and round the corner slightly. Burnish the pivot with a steel burnisher, particularly the end which will need no other treatment. Finish the burnishing by rolling the burnished from the cylindrical part around to the end. This avoids producing a burr at the corner. Now bring the cylindrical portion of the pivot to a high polish with the boxwood slip and diamantine.

If a balance pivot needs considerable reducing as is sometimes required in fitting a new staff, the Arkansas slip will work faster. Reduce the pivot until the jewel just fits. Reduce to a free fit with the jasper slip, and, lastly, finish the job as already explained.

Material dealers stock sapphire grinders and polishers that some workmen may find more to their liking. There is no objection for the repairman to do a little experimenting on his own. However, try any new method on old discarded pinions or staffs until you are satisfied that the method is all right to use on customers’ watches.

Balance Assembly Repairs

Under the heading of *balance assembly repairs* we shall include such operations as are necessary in fitting a factory-made balance staff; in fact, it will take account of practically all repairs which involve the balance and balance spring.

FITTING A NEW BALANCE STAFF

Removing the balance spring. Lay the balance on the bench block, with the roller table protruding through one of the holes, and hold securely with the first and second fingers. Next insert a well-sharpened screw driver under the collet at a point opposite the pinning point of the balance spring, Figure 20. Twist the screw driver and the spring is readily removed.

Removing the roller table. The removing of the roller table is next in order. For this we use the roller remover, of which there are many varieties on the market. Most of these work on a general plan, whereby two prongs support the underside of the roller table. By using a hollow punch fitted to the lower pivot and tapping lightly with a brass hammer, the roller is removed.

Removing the old staff. There are two types of balance staffs: (1) the riveted type, Figure 21, and (2) the friction type, Figure 22. Different methods are required in the removal of the two types from the wheel.

Consider first the riveted type. It is important that the staff be removed by some method that will not in any way damage the hole in the wheel. Two methods are shown in Figure 23. The first shows the riveted portion being turned off, and the second shows the removal of the hub. The second method is less likely to enlarge the hole in the wheel, but it is often more difficult to execute. If the first method is used, punch out the staff in the staking tool by securing the wheel with the staff-removing tool. Two types of staff-removing tools are shown in the tool and material catalogs.

In removing a staff of the friction type, see that the hub rests on the die of the staking tool. Otherwise the hub will be pushed out with the staff.

Selecting and fitting a new staff. Selecting a new staff for any standard make of watch is a simple matter, as the watch factories have provided excellent means for identifying the proper staff for a particular model. The more popular makes have the model number stamped on one of the bridges or

on the lower plate under the balance. In many of the Swiss watches, we must examine the setting bridge to identify a particular model. The size is determined by an old French measurement called *lignes.* Some American companies have adopted the system, but American companies generally use a system whereby a watch size is designated by the word *size,* as: 12 size; 8/0 size; 14/0 size, etc.

If a staff for a particular watch needs to be ordered, determine the size by means of a gauge showing lignes and sizes. If the watch is Swiss, compare the setting bridge with those shown in the material catalogs. When the correct size and setting bridge is located, note the movement model number on your order envelope and send sample if available. Genuine factory material should be used whenever possible. It pays dividends in the saving of time.

Having selected the correct staff (the riveted type) for a given watch, proceed as follows: Select a hole in the staking tool die in which the roller axis fits freely, *A,* Figure 24. Select a round-faced hollow punch that fits over the collet axis and rivet the staff to the wheel. Two or three light taps with a brass hammer should suffice. Turn the wheel so that the riveting takes place evenly. Finish the job by using a flat-faced hollow punch.

In fitting a staff of the friction type, no fixed rules for procedure can be given, as there are many different kinds. The method of replacing the staff would be suggested by the procedure observed in removing the old staff.

Adapting the balance to the watch. The fitting of the pivots to the hole jewels is next in order. Balance jewels should fit freely, but with a minimum of side shake. Make certain that the pivots are long enough to protrude through the jewels as in Figure 25. Replace the cap jewels and try the balance in the watch. Adjust the end shake, either by shortening the pivots or bending the balance bridge, but make certain that the balance bridge remains parallel to the lower plate.

Fitting the roller table. Place the roller table on the staff and note that the table stands near enough to the hub so as to stake on without any danger of splitting the table. This distance should be about .5 millimeter in pocket watches and about .2 millimeter in wrist watches. Grinding the roller axis with the Arkansas slip is satisfactory in most cases. If the roller axis needs considerable reducing, use the graver and finish with the Arkansas slip.

SETTING THE ROLLER JEWEL

Often the roller jewel is broken or lost. Again, the jewel may be loose, sometimes very slightly so. For this reason, a very thorough examination should be given with the pivot eye loupe.

Let us assume that the roller jewel is missing. Place the lever on a piece of hard pith and try a number of jewels in the fork slot. The freedom of the jewel should be such that it may tip to an angle of about 15 degrees. If still in doubt as to the proper freedom, examine a number of new watches. Place the balance upside down on a piece of pith. Grasp the guard finger with the tweezers and try the freedom of the fork slot around the roller jewel.

Having selected a roller jewel of the required size, proceed with the setting as follows: Insert the roller table between the jaws of the combination tool, Figure 26, and heat the end of the tool over an alcohol lamp. The greatest amount of heat occurs near the top of the flame. When the roller table is sufficiently heated, place a small amount of shellac on the back of the roller table at the spot directly over the hole for the jewel. The hole is thus filled with shellac. While the shellac is still soft, insert the roller jewel and again heat the roller table. With the tweezers, straighten the jewel to an upright and parallel position with the staff before the shellac cools. The flat face of the jewel stands away from the center of the roller table.

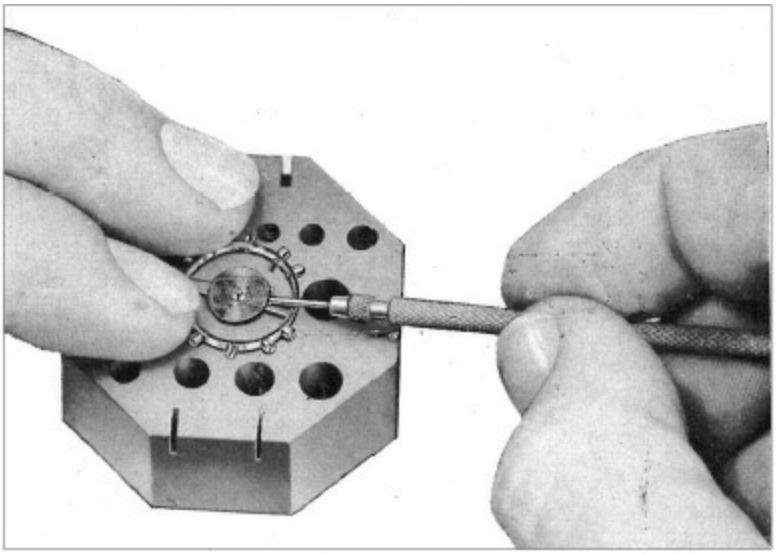

REPRODUCED BY THE PERMISSION OF THE DEPARTMENT OF TUB ARMY
Figure 20. Removing balance spring from balance staff.

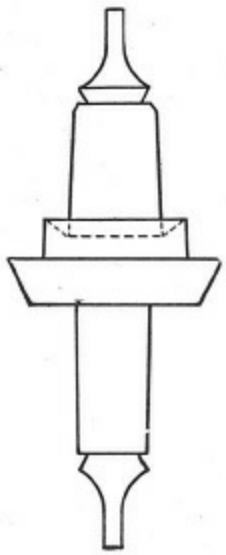

Figure 21. Balance staff. The type that is riveted to the wheel.

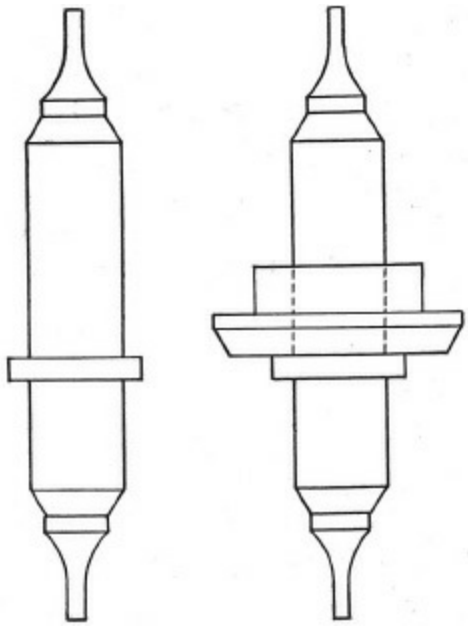

Figure 22. Two-piece friction fit staff.

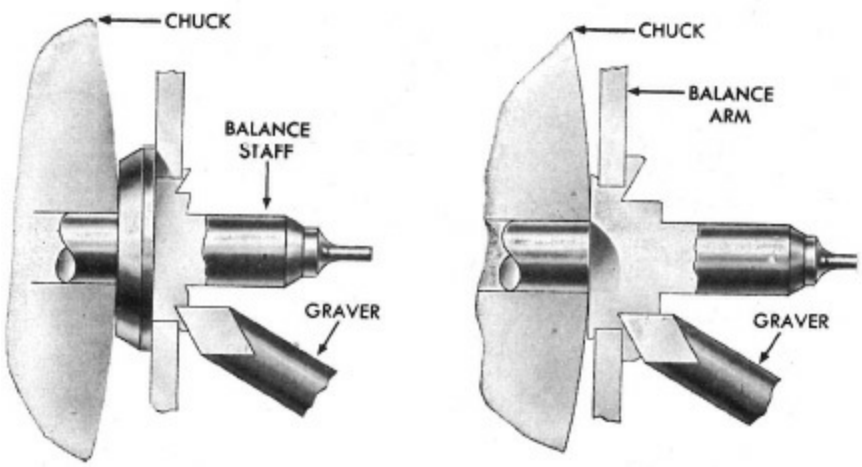

REPRODUCED BY THE PERMISSION OF THE DEPARTMENT OF TUB ARMY
Figure 23A. Removing damaged balance staff.

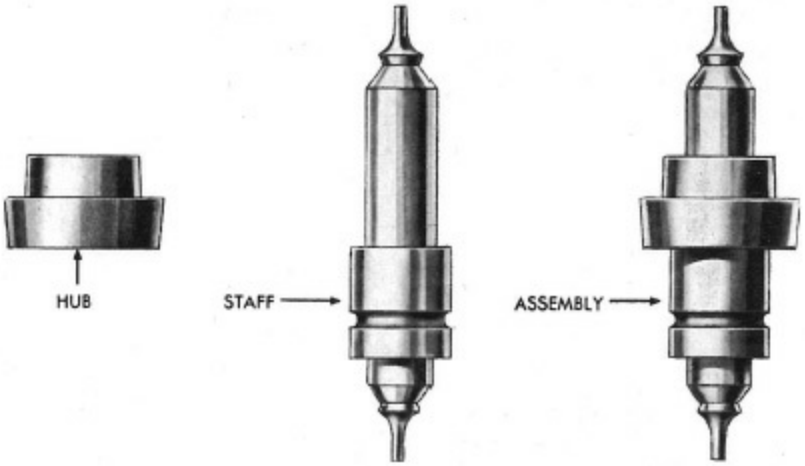

Figure 23B. Two-piece friction fit staff.

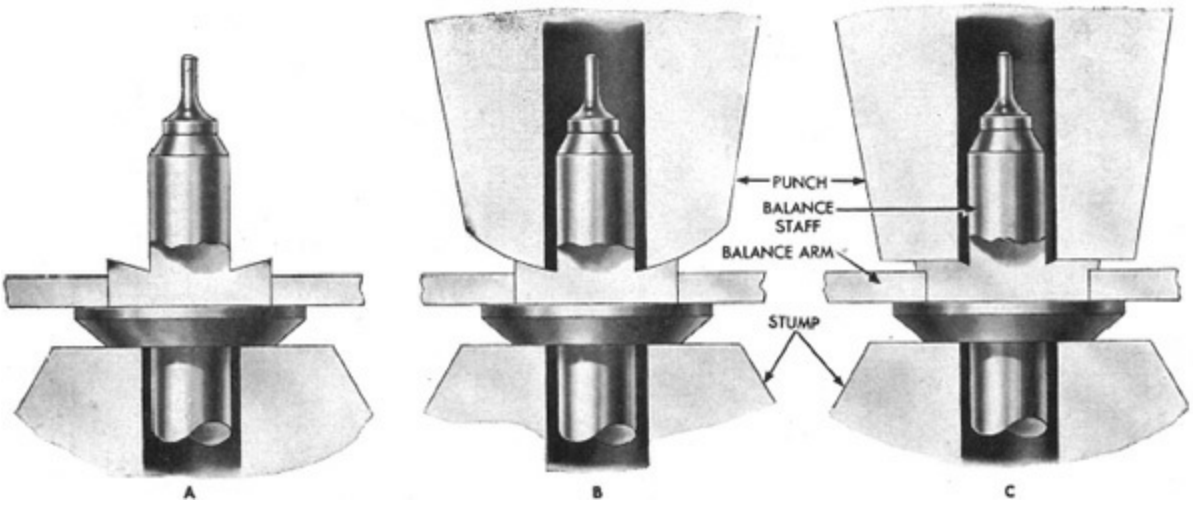

REPRODUCED BY THE PERMISSION OF THE DEPARTMENT OF TUB ARMY
Figure 24. Replacing balance staff.

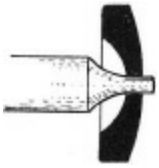

Figure 25.

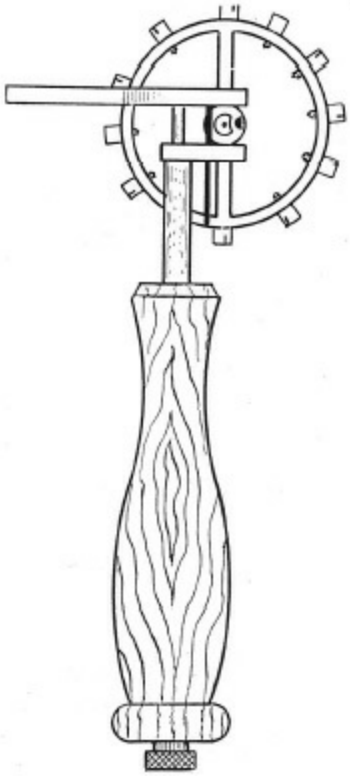

Figure 26.

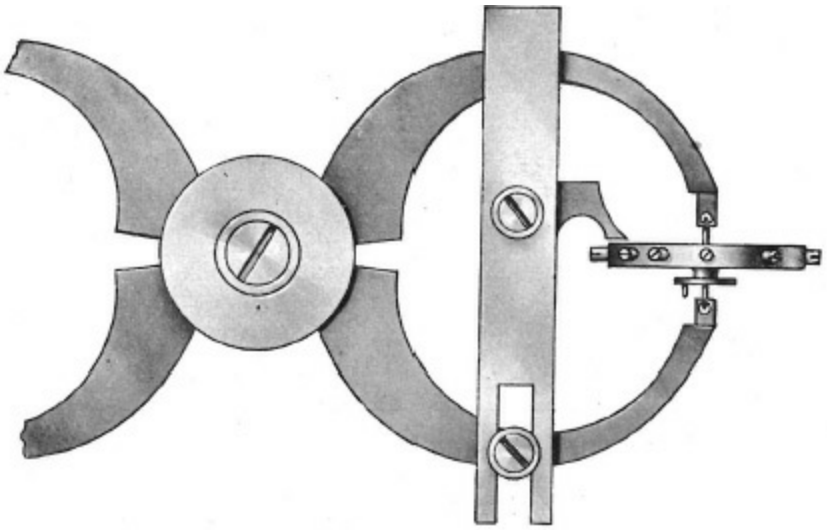

REPRODUCED BY THE PERMISSION OF THE DEPARTMENT OF TUB ARMY
Figure 27. Balance truing calipers showing position of indicator for truing in the flat.

TRUING THE BALANCE WHEEL

The guides on most calipers are made in a manner that would suggest that the guide be placed to the right of the balance and that the top side of the balance rim face the guide. This, we believe, is illogical for reasons that will become apparent as we continue. Instead, let us alter the guide and place it to the left of the balance, Figure 27. Place the balance as shown so that the top side of the rim faces the guide.

Truing the compensating balance. In the act of truing, the calipers are held in the left hand and the fingers of the right hand are used to manipulate the wheel. It will be observed that the thumbnail will press on the lower side of the balance arms and rims and, should any marks be made, these will not show after assembly.

Start by leveling the arms in the flat. Compare with the guide, noting that the distance from the arms to the guide is equal. Now true the rim from the middle of each half to the loose ends. Next observe the round; set the guide to the outer rim, and push the loose ends of the rims in or pull out, as the case may require. It is usually necessary to return to the flat and re-true, after which the round is again checked. Often it is necessary to go through the process several times.

Truing the solid balance. When the staking of a solid balance wheel on

a new staff is carefully done, truing is often unnecessary. Particularly is this true of the newer watches. The riveting must be done lightly, for it is the heavy tapping of the hammer that springs the balance wheel out of true. If truing is necessary, the procedure is similar to that already given.

When making the bends, see that the calipers are tightly closed so as to avoid any danger of breaking pivots. All truing is done in the calipers, preferably with the fingers. It is very rarely that one needs to use the wrench that is supplied with each caliper by the manufacturer.

POISING THE BALANCE

The three-legged poising tool, having two legs that are adjustable, is the only kind of tool suitable for the purpose. The tool fitted with a level has one advantage in that the instrument can be adjusted level.

Place the balance, with roller table attached, on the poising table and note the heavy point. The poising is accomplished by reducing the weight with special cutters on the heavy portion, or adding balance washers to the light portion. A tool for reducing weight has a cutter surrounded by a hollow tube. These are made with several sizes of tubes to fit the many different sizes of balance screws. In order to use the weight reducing tools conveniently, it is first necessary to secure the balance in the balance clamp.* By pressing the cutter down on the top of the balance screws and turning as with any watch screw driver, the screw is hollowed out in the form of a V.

---

* The balance clamp, a special tool designed by the writer, has not yet been placed on the market.

In some cases we may reduce weight by sawing the slot in the screw deeper. An excellent poising saw may be made from a single-edge safety-razor blade. Lay the blade lengthwise on a medium file. Give the blade a sharp tap with a small hammer. Teeth will be formed on the blade, and its capacity to cut the balance screw slot will be found to be as good as any poising saw.

Suppose, now, we wish to add weight. Loosen the screw slightly with a screw driver. Then, with a balance screw holder, remove the screw. Place the washer on the rim of the balance and replace the screw. Never place under a balance screw more than one washer. It is essential that one has a large

assortment of balance washers for the many sizes of balance screws.

The balance is considered in satisfactory poise when it can be stopped at any point and remains stationary.

TRUING BALANCE SPRINGS

Truing balance springs is one of the most important branches of watch repairing, and the repairman is judged by the quality of his balance spring work. Since it takes years of practice to become efficient, we advise the beginner to practice — plenty of practice —at every opportunity, on the balance springs of old movements.

Tweezers for balance spring truing must have fine points. It is desirable to have two pair with straight points and one or more with curved points.

Truing in the round. Place the balance, with balance spring attached, in the brass calipers of light construction. These calipers can be made more effective by fitting friction jewels in the ends. Rotate the balance and using a 2-inch eye loupe, follow the coils that lie around the collet. If the coils appear to jump in and out from the collet, the spring is out of true in the round. Three examples are shown in Figure 28. The springs at *A* show the error. The arrows show the manner in which the errors are corrected and *B* shows the corrected springs. Usually a twisting motion with the tweezers is required. In a few cases, a push or pull with a sharp-pointed instrument does the work. Others require manipulations at two or more points. Corrections normally do not extend beyond the first ¼ coil from the pinning point. The illustrations are selfexplanatory as to the manipulations required.

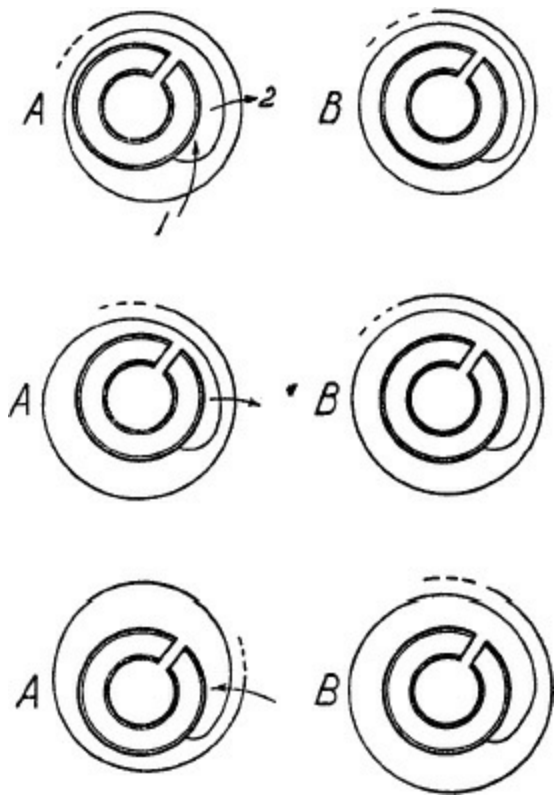

Figure 28.

Truing in the flat. Balance springs out of truth in the flat are to be found either high or low 90 degrees from the pinning point, or high or low opposite the pinning point. To correct the error, raise the spring on the low side, or push down the high side. Often it is necessary to remove the spring from the balance, place it on a broach or tool especially made for the purpose, and pull down the high side. When the flat is made true, examine again the round. Often a correction in the flat will distort the spring in the round and the operations in both the flat and the round may need repeating several times.

Adapting the spring to the watch. Place the balance bridge upside down on the bench. Lay the balance thereon and secure the stud to the balance bridge. Now place the balance assembly in position on the lower plate. Since the balance assembly *only* is secured to the lower plate, we have an excellent opportunity to view the balance spring from all angles and thus realize an accurate picture of the needed corrections with regard to leveling and centering. Sometimes corrections can be made with the balance in the watch. More often it is necessary to remove the balance. If so, remove the spring from the bridge and also from the balance and lay the spring on a piece of

ground glass*. The light shining through the glass gives a much clearer picture of the spring than is otherwise possible, and the needed corrections are more easily executed.

---

* The ground glass is prepared as follows: Secure two pieces of plate glass about 4 inches square. Place a small quantity of medium Carborundum powder on one glass and add a little clock oil. Lay the other piece of glass over the first piece and rub the two pieces together with a circular motion. Continue until both glasses are thoroughly frosted.

Correcting the coil at the stud. The manipulations of the outer coil of the flat spring or the overcoil of the Breguet are so numerous that a detailed account cannot be given. A few general statements, therefore, must suffice. The corrections needed in the flat spring consist of: (1) centering, (2) leveling, and (3) forming the coil that passes between the regulator pins to a circle whose radius is the balance center. To realize a satisfactory adjustment of correction 3, it is often necessary to bend the spring inward at a point near to the stud, Figure 29.

In addition to the above corrections, the Breguet spring must show (1) concentric vibrations around the balance staff, and (2) an overcoil that stands to a safe height so that there is no rubbing of the coils or contact with the stud.

If the overcoil is not made to the correct shape, the concentric motion, as stated above, will not take place. If corrections are needed, the work consists of manipulating the overcoil according to the following rules:

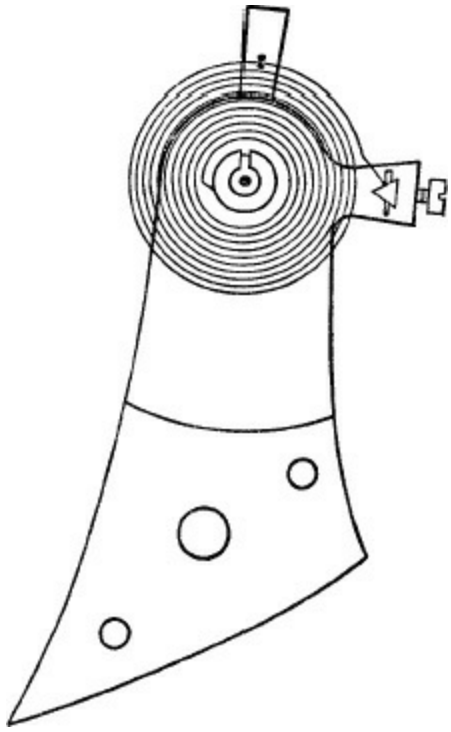

Figure 29.

(1) *If the eccentric motion takes place opposite the regulator pins (as in a flat spring), bring in part of the overcoil toward the center of the spring.*

(2) *If the eccentric motion takes place on the same side as the regulator pins, move part of the overcoil back into the body of the spring.*

Other corrections of errors relative to the Breguet overcoil consist of (1) raising the overcoil; (2) lowering the overcoil; (3) leveling; (4) centering; and (5) removing kinks. The student must create a mental picture of the form desired before starting, and then proceed with caution. There are no fixed methods. The manipulations are twisting, bending, pushing, pulling, and pinching. The upward bend and the leveling bend, at the start of the overcoil, are made by grasping the spring with strong tweezers at the desired point and pushing the spring into a piece of soft wood. Try this on old balance springs.

Tangled balance spring. It occasionally happens, even to the most experienced horologists, that a balance spring will become tangled due to an accident in handling. From all appearances it would seem that there is no solution but to order a new spring.

It is often possible, however, to untangle the spring. Note the point where the outer coil is looped in and through the coils of the spring. Using a small

instrument such as the tool shown in Figure 14, work the tangled part, by means of a circular motion, toward the outer portion of the spring. It can now be seen where the outer coil is looped through the several coils. Next work the stud between the coils through which it was tangled and the spring will be instantly restored to its original shape — provided, of course, that the spring has not been bent during the manipulations. The last operation requires two pairs of tweezers; it is preferred that one pair have curved points.

It is sometimes desirable to remove the stud. By so doing the tangled coil may be pulled out from between the several coils with less difficulty.

Untangling balance springs requires considerable practice, and it is admitted that the job is not always successful.

Putting watch in beat. The watch is in beat when the roller jewel points directly toward the pallet center at the time when the balance spring is at rest. To accomplish this proceed as follows: Place the balance bridge on the lower plate. Using an eye loupe, center the balance above the jewels in the bridge in such manner as to cause the roller jewel to point toward the pallet center. Note the position of the stud hole in the bridge and associate this position with some point on the rim of the balance wheel. Then stake the balance spring on the staff in this position. Repeat the above procedure to test the accuracy of the work.

*Escapement Adjusting**

The importance of understanding the escapement cannot be overestimated. Large pocket watches often function quite satisfactorily with faulty escapements, but with small wrist watches it is very different. In these the escapement must be practically perfect. Watches with poorly adjusted escapements stop persistently, though perhaps only occasionally. Erratic rates, too, can be traced to defective escapements.

---

* The action of the lever escapement is explained in Chapter Five of Part II.

Wheel and Pallet Action

The relation of the escape wheel to the pallets is called the *wheel and*

pallet action. Under this heading, we shall consider the functions of: draw, drop, lift, and banking to the drop. In studying the above functions, the watch is assembled complete except for the dial and the balance. It is preferred that the student select a 16-size American watch for practice.

DRAW

Draw is necessary to keep the guard finger from too frequent contact with the safety roller. A sudden jar will cause the lever to be thrown away from its bank, and the guard finger will momentarily touch the safety roller. The draw will instantly return the lever to its bank and no particular harm is done. However, if the draw is ineffective, the guard finger will drag on the safety roller and interfere with the free motion of the balance. Stoppage sometimes results.

Testing the draw. With the mainspring partly wound, we should expect to find the lever at rest against a banking pin. With the tweezers, lift the lever away from its bank, but not so far as to unlock the pallet, Remove the tweezers, and the lever should, if the draw is satisfactory, return instantly to its bank. Move the lever to the opposite banking and try again. If the lever fails to return to its bank, the pallet stones may not be clean. Sometimes the locking face of the pallet may not be sufficiently oiled. Again the escape wheel and lever may not have the necessary end shake. If all of the above conditions are satisfactory, want of draw would be due to improper angle of the pallet stone.

Correcting the draw. Assuming, now, that the want of draw is due to a faulty angle of the pallet stone, we proceed as follows: Remove the lever from the watch and secure it upside down on the pallet warmer. Hold the tool over an alcohol lamp until the shellac melts and, with the tweezers, press on the pallet wanting in draw in such a way as to increase the angle.

Sometimes the jewel fits the slot so tightly that tilting is impossible. In this case a narrower jewel may be substituted. In changing jewels be sure the angle of the impulse face is the same as that of the old jewel.

DROP

After a tooth of the escape wheel passes the lifting face of a pallet, the wheel turns more quickly, not restricted in any way, until another tooth locks

on the opposite pallet. This free motion of the wheel is called *drop.* When a tooth drops off the receiving pallet, it follows that another tooth locks on the discharging pallet. Since the drop of the tooth occurs between the pallets, it is called *inside drop.* Likewise when a tooth drops off the discharging pallet, another tooth locks on the receiving pallet. This, in contrast to the former, is called *outside drop.*

Drop should be equal but we do not always find it so. Errors in the drop are called *close inside* or *close outside.*

Correcting the drop. Drop, like draw, is corrected by tilting the pallet jewels. If close inside, spread the pallets; if close outside, bring the pallets closer together. Examine the draw after each alteration.

LIFT

The lift in the club-tooth escapement is divided between the teeth and pallets. Proportions vary in the different makes of watches but the latest trend in escapement design is to show a larger portion of the lift on the pallets as shown in Figure 30. The purpose is to avoid a parallel meeting of the impulse planes of both teeth and pallets which invariably takes place when the impulse angles are more evenly divided. Considering the fact that the teeth and pallets are always oiled, the cohesion is sufficient to resist the separation of the parts in contact.

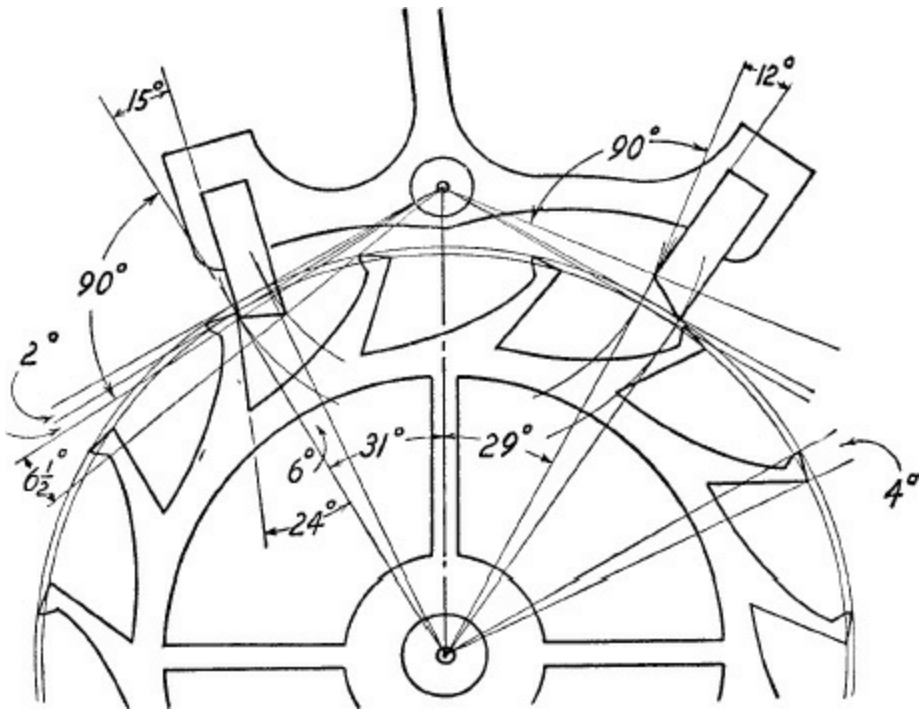

Figure 30. Club-tooth lever escapement.

It will be further observed that the lifting angles of the pallets are different, being greater on the discharging pallet. In this instance the angle is determined from the locking face of the pallets. We mention this so that the student will never make the mistake of fitting a pallet jewel to the wrong side of the pallet frame.

BANKING TO THE DROP

The term *banked to the drop* implies a particular adjustment of the banking pins. This is realized when the banking pins are adjusted in such a manner as to permit a tooth to drop off the pallets. To bank to the drop, proceed as follows: Turn the banking pins *in* so the lever will *not* permit the teeth to drop off either pallet. Then turn the pins out slowly and stop the instant a tooth drops off the pallets*. Figure 28, Part II, shows an escapement so adjusted. Note the extent of the lock on the pallets and note also that the roller jewel barely clears the slot corner and that the guard finger shows a similar clearance to the safety roller. The lock on the pallets, when an escapement is banked to the drop, is called *drop lock.* It is a varying quantity depending on the position of the pallet jewels in the pallet frame.

* In Swiss watches and some American wrist watches it is not practical to bank the escapement to the drop because of the fact that the banking pins are not supplied with eccentric screws. In this case the usual practice is to move the lever slowly until the escape tooth drops and at the same instant cease moving the lever and take note of the extent of the lock on the pallets. A slight additional motion of the lever should be required before the lever will reach its bank, which is, of course, beyond that of drop lock. The additional motion is called *slide* and will be considered further in the later portion of this section on escapement adjusting.

Banking to the drop serves to unravel most escapement difficulties and forms a basis for making important tests to determine the true condition of the escapement. These tests we shall consider presently.

Fork and Roller Action

We have, up till now, considered the functions of: draw, drop, lift, and banking to the drop. These, it is observed, constitute the wheel and pallet action. We are now ready to investigate the relationship between the fork and roller jewel, which is termed *fork and roller action.* This, however, must show a proper relationship to the wheel and pallet action, which is determined by way of three tests: (1) guard safety test, (2) corner safety test, and (3) the curve test.

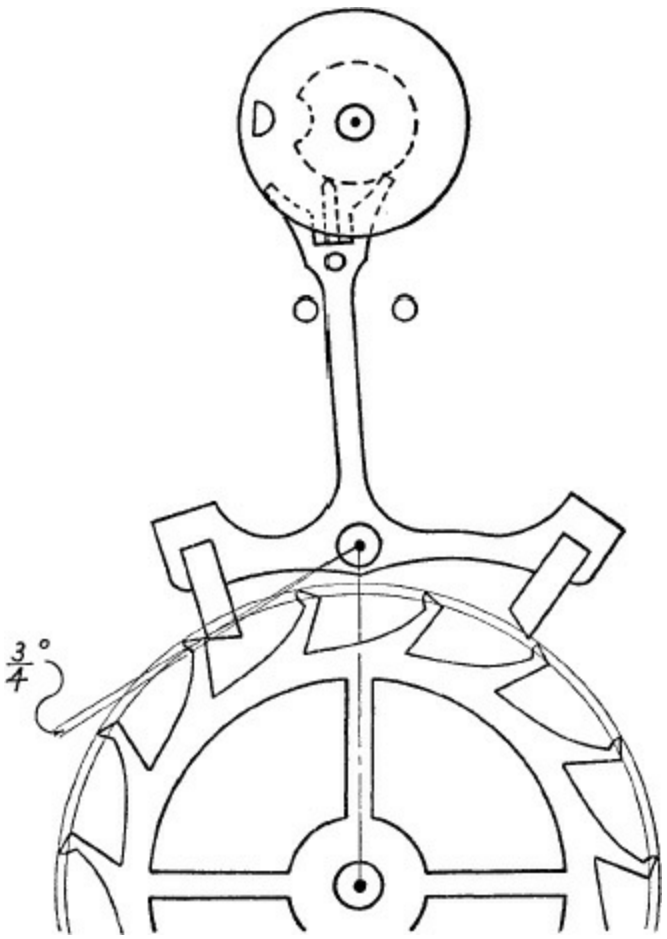

Figure 31. Showing the procedure in making the guard safety test.

GUARD SAFETY TEST

The escapement is banked to the drop and the balance is fitted to the movement. Rotate the balance so that the roller jewel stands outside of the fork and, with the first finger, hold the balance in this position. Now, with the tool shown in Figure 15, lift the lever away from its bank, thereby causing the guard finger to come in contact with the edge of the safety roller, Figure 31. With the lever held in this position, examine the remaining lock on the pallet. This remaining lock is called the *safety lock* and should represent half of drop lock. The test should next be tried on the opposite pallet and a similar lock should be found.

CORNER SAFETY TEST

Starting with the roller jewel in the fork slot, rotate the balance slowly until such time that one tooth passes the letting-off corner of a pallet and

another tooth comes in contact with the locking face of the opposite pallet. A slight additional motion applied to the balance will bring the roller jewel in a position opposite the slot corner. With the balance held in this position, lift the lever away from its bank, thereby causing the slot corner to come in contact with the roller jewel, Figure 32. With the lever held in this position, examine the remaining or safety lock. Try this test on the opposite pallet and, if the safety lock is the same on both pallets, the lever's angular motion from the line of centers will be practically equal.

The safety lock shown by the corner test should be the same as the safety lock shown by the guard test, which, as we have already learned, is half of drop lock.

CURVE TEST

The purpose of the curve test is to determine the correct curve of the horns of the fork. The horns should be so shaped that the roller jewel will enter without catching, while, at the same time, the guard finger is resting on the safety roller. When the guard finger enters the crescent, the safety action is transferred to the roller jewel and the horns of the fork. It is important, therefore, that a satisfactory safety lock is still maintained.

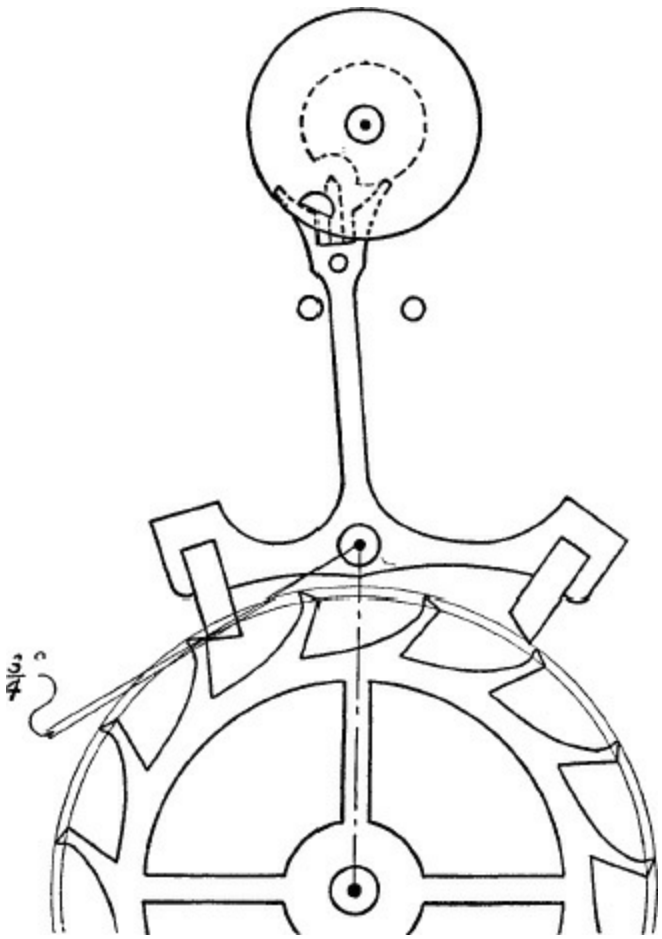

Figure 32. Corner safety test.

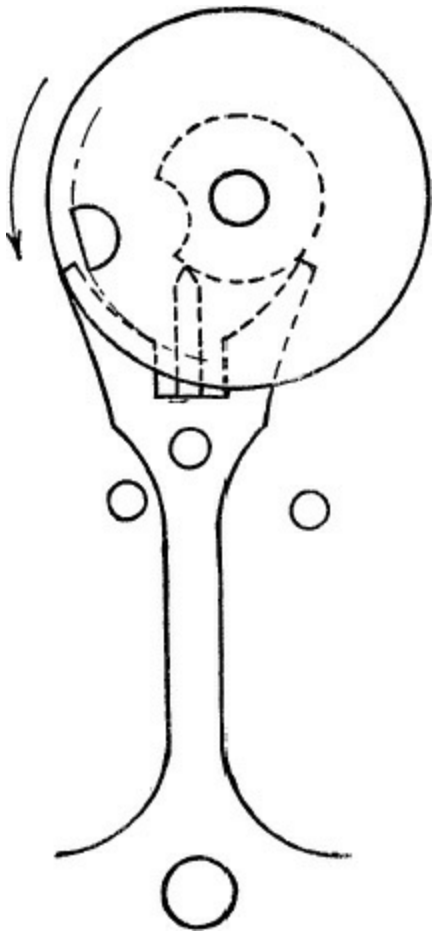

Figure 33. Curve test.

To apply the curve test, proceed as follows: Rotate the balance so that the roller jewel stands completely outside the horns of the fork. Next lift the lever away from its bank, thereby causing the guard finger to come in contact with the safety roller, Figure 33, and, while the lever is held thus, turn the balance so that the roller jewel will move toward the fork slot. If the roller jewel passes the horns of the fork and enters the slot, the escapement is satisfactory as far as this test is concerned. If the roller jewel catches on the tips of the horns, a number of faulty conditions could be present. The most common are: guard finger too short, or roller jewel advanced too far.

Escapement Errors

The functions and tests of the escapement having been considered, we are ready to make such corrections as appear necessary. Several tools and supplies are required. These are: a pallet warmer; alcohol lamp and alcohol;

2-inch eye loupe; jewel cement, and lever holding tool.

To move the pallet jewels, place the lever upside down on the pallet warmer, and tighten it securely by means of the clamp provided on the tool. Heat over the alcohol lamp to soften the shellac and, using the eye loupe, shift the jewels in the desired direction with a small screw driver. Care must be taken not to chip the face of the jewels. The manner in which the jewels are altered is determined by the nature of the errors present. In the following paragraphs, the faults are noted and the proper procedure suggested.

Locking too deep. Locking too deep is shown by too much guard and corner freedom. After banking to the drop, apply the guard safety test and the corner safety test as already explained and determine which side shows the greater guard and corner freedom. This is our guide as to which pallet jewel to push *in.* Obviously the pallet *opposite* to the side showing the greater freedom is the pallet to push in. After each alteration, re-bank to the drop and repeat the tests.

Locking too light. When the locking is too light, some of the teeth may fail to lock. In same cases there is no locking at all. When the escapement is banked to the drop, the roller jewel may not leave the fork slot, or perhaps the roller jewel may leave the fork slot only on one side. The adjustment consists in advancing the pallet jewel on the side where the angular motion of the lever is longer from the line of centers. Test for guard and corner freedom after each alteration.

Lever too long. This error is rarely met with in watches made in recent years. It is, however, occasionally found in watches made over thirty years ago. If the error is small, a long lever may be made to function satisfactorily by tilting the roller jewel toward the balance staff. This provides the necessary corner freedom. Of course, the roller jewel should stand reasonably parallel to the staff and, if the error is quite extreme, other methods of correction are required.

The excessively long lever is, therefore, corrected by grinding the horns of the fork. The procedure is as follows: Place in the lathe a piece of soft steel wire and turn it down to such size as just to fit the horns of the fork. Applying Carborundum powder and oil to the wire, grind the horns back, thereby making the lever shorter. A special tool for holding the lever may be purchased at tool and material dealers. Frequent tests should be made so as to

not overdo the correction.

Lever too short. The short lever shows too much corner and guard freedom and is corrected by advancing the roller jewel. If the lever is much too short, stretching is required. To stretch the lever, place a small flat stump in the staking tool and lay the lever thereon. Using a punch with the sides flattened, lightly tap the lever. If the lever becomes bent, turn it over on the stump and give it another light tap. Frequent tests should be made as the stretching takes place.

Insufficient pallet frame clearance. One of the conditions that is often puzzling to beginners is the stopping of a watch which, from all appearances, seems to be caused by a fault in the train. However, upon removing the lever, the train runs down. Figure 34 shows the cause. A tooth engages the pallet frame at the point near the pallet arbor. The correction consists of filing the pallet frame so that the teeth of the wheel will pass without catching. The difficulty may also be caused by defective jewels or worn holes which support the escape wheel and lever.

Slide

Up to this point in our discussion, the escapement has been banked to the drop. There is one additional adjustment called *slide.* Slide consists of opening the banking pins beyond that of drop lock, providing a slight additional motion of the lever before the banking pins are reached. Slide is necessary because of mechanical imperfections such as variations in the length of the teeth of the escape wheel and the side shake in the hole jewels. Slide, however, should be kept small. Excessive slide increases the angular motion of the lever and its connection with the balance, resulting in an increased unlocking resistance, a shorter arc of motion of the balance, and poor timekeeping. The banking pins should be turned so as to stand as far away as possible from the pallet center, so as to lessen strain on the lever pivots if the escapement overbanks.

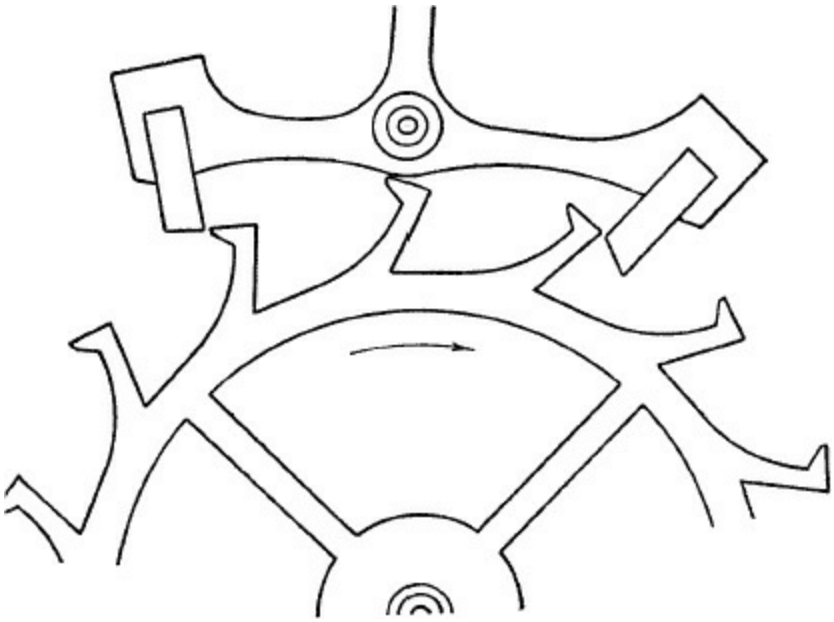

Figure 34.

Slide is the last adjustment — the finishing touches, so to speak, in escapement adjusting.

Faulty ticking of the escapement. Watches that run erratically or stop occasionally will often be found to have a knocking sound in one or more positions. Beginners may find it difficult to distinguish between a tick that has a knock present and one that does not, but can, with experience, detect it.

This knocking indicates a faulty adjustment of the escapement. Try the guard safety test and the corner safety test. A small corner freedom will produce a knock and will show up in that position where the balance drops toward the fork slot. If, upon examination, the corner freedom appears sufficient and equal to the guard freedom, remove the balance and see if there is any slide present. Want of sufficient slide will also produce a knock.

If the escapement is otherwise in good adjustment, the above errors can be corrected by opening the banking pins slightly. When this is done, the knock will disappear and the watch will usually run satisfactorily.

Repairing the Dial Train

Tightening the cannon pinion. The cannon pinion must fit, with some friction, over the post of the center wheel. Want of sufficient friction will result in the cannon pinion slipping, and consequently the hands will fail to

move.

Most staking tool sets include the equipment necessary to tighten cannon pinions. Fit a V-shaped stump in the die of the staking tool frame. Insert a round broach in the cannon pinion and lay the pinion on the V-shaped stump. Select a chisel-shaped punch and give the cannon pinion a light tap with the brass hammer, thus closing the hole in the cannon pinion. Fit the cannon pinion on the center post and *feel* the friction by pushing the pinion around with the tweezers.

Many modern watches have a *blind* cannon pinion ; that is, a pinion with the end closed. We cannot run a broach through this type of pinion. In this case, shorten a broach until it fits the cannon pinion with some friction, and save for future use. Doing the same on other jobs, one will soon have a number of such broaches that will make a set. These could be fitted to a block or box and numbered according to size. A set of six broaches should suffice.

After fitting the cannon pinion to the watch, put the hour wheel in place on the cannon pinion. Make certain that the wheel fits freely. If it binds, broach out slightly. Place the dial in position and note the shake of the hour wheel. Always use dial washers, if the space permits. Flatten the washer, as the tension should not be very great. Dial washers aid in keeping the minute and hour hands apart, and the hands are, therefore, less likely to catch on each other. Note, also, that the hole in the dial is centered to the pipe of the hour wheel. Often the hole in the dial is not centered and the hour wheel, with hour hand attached, will bind in the hole. Remove the dial and file the hole with a small round file so as to center the hole to the hour wheel. Remove the burr with the wheel countersinks and replace the dial.

FITTING HANDS

Beginners are to be warned about the fitting of hands to watches, and some horologists of long experience get comebacks for no other reason than the faulty fitting of the hands. Extreme caution, therefore, cannot be overemphasized, for the average owner of a watch is quite ignorant of any part of the mechanism, and no matter how carefully the rest of the work has been done, the job will be judged as unsatisfactory.

See that the hands have sufficient clearance. Be sure also that the hands lie parallel for most of their length. The outer end of the minute hand should be bent down toward the dial slightly.

Restoring rusty hands. Hands that are rusty and otherwise unattractive, if the conventional black in color, can be made to look like new by touching up with India drawing ink. Sharpen a piece of pegwood to a point and apply the ink freely to the hands. Sometimes it is desirable first to smooth the hands with an Arkansas slip.

Sometimes the customer desires black hands in place of gold or silver hands so as to read the time better. These, too, can be made black with India drawing ink.

CLEANING DIALS

The silver dials found in modern watches often get tarnished and soiled badly. If the figures are baked on, the dials can be cleaned by dipping into a solution of cyanide of potassium. This is prepared by dissolving one-half ounce of cyanide in a quart of hot water and adding two ounces of strong ammonia. Rinse the dial in warm water and dry in warm sawdust or dryer.

Painted dials, however, will not stand such treatment, as the figures are likely to be removed. These dials can be cleaned by using baking soda. Moisten the first finger in water and dip into the baking soda and rub the dial lightly. Wash carefully with soap, rinse in warm water, and dry in warm sawdust or dryer.

Magnetism

Magnetism will cause a watch to gain time, to lose time, or, if heavily magnetized, to stop altogether. To test for this condition, remove the back of the case and place a compass over the balance wheel and winding wheels. If the watch is magnetized the needle will be deflected.

To remove magnetism, place the watch in the demagnetizer and, while the current is maintained, slowly draw out the watch to a distance of about 2 feet. Test the watch again. If magnetism is still present, repeat the above procedure until the compass needle lies completely at rest.

Never attempt to demagnetize the balance spring when it is out of the movement.

PART I

Chapter Four

REPAIR AND ADJUSTMENT PROBLEMS TAKEN FROM PRACTICE

THIS CHAPTER consists of a compilation of a number of repair and adjustment examples experienced by the writer over a considerable period of years. Its purpose is to show the reader the actual procedure in specific cases, with the hope that perhaps some of these examples may be the answer to the difficulties you may be having with some particular job. Consider first a few general statements relative to points sometimes overlooked by beginners.

Points to Remember in Practical Repairing

Many modern wrist watches have a sweep second hand which necessitates a careful adjustment. Often the crystal is not high enough to provide the necessary clearance. One can be fooled regarding the required height of the crystal. The watch may run on the rack but not for the owner when worn on the wrist. The reason seems to be that the extremity of the second hand will vibrate when worn and touch the crystal or minute hand, causing the watch to stop and later start again.

Other causes for stopping that are sometimes overlooked are: (1) tight minute wheel or hour wheel; (2) rusty pinions; (3) rusty escape wheel teeth; (4) set mainspring; (5) loose roller jewel; (6) roller jewel too long, touching guard finger; (7) out-of-flat center wheel touching balance wheel; (8) cracked jewels or worn holes in the plates and bridges.

Some of the causes for erratic rate are: (1) balance out of poise; (2) magnetism; (3) loose roller jewel, sometimes so little as to escape detection; (4) regulator pins pinching balance spring; (5) regulator pins spread too far apart; (6) loose cannon pinion; (7) balance motion too long; (8) balance motion too short.

There are many causes for Error Number 8 but whatever the cause an erratic position rate will inevitably take place*. Assuming that the watch is clean and in good mechanical condition, a short balance motion would most likely be due to a set mainspring or a spring of incorrect strength. The correct balance motion is 1½ turns, that is, ¾ of a turn in one direction and ¾ turn on the return vibration. Success in watch repairing depends on securing a full balance motion on every job turned out.

---

* The theory and practice of position adjusting is fully analyzed in A *Practical Course in Horology,* Harold C. Kelly, Chas. A. Bennett Company, Peoria, Illinois.

If, after a thorough examination of that problem watch, no errors are discovered, do not conclude that the owner is at fault. Instead wear the watch yourself. The horologist will sometimes be embarrassed to learn that *the customer is right.*

Practical Problems in Position Adjusting

Adjusting watches with the watch rate recorder. Wrist watches, because of their small size, cannot be adjusted to the close position rating generally attained in pocket watches. Allowances vary according to size. Pocket watches are rated to within 10 seconds between five positions. The 10½ ligne and larger can usually be rated to within 30 seconds in three positions but the smallest of watches present many difficulties. In these a rating within 90 seconds for three positions should be considered satisfactory.

In comparing the balance springs of large pocket watches and small wrist watches, we find that the collets and the innermost coils are larger *proportionately* in the latter. This is required because of constructional difficulties. As a result errors inherent in the balance springs are increased and it follows that perfection of the inner terminal is of vital concern.*

---

* For an analysis of the position error inherent in the balance spring see page 274.

Counterpoising, sometimes practiced in pocket watches, is not advised in small wrist watches, as the balance motion is more variable than in large

pocket watches.

Another observation is the relative increase of the escapement error in the smallest of watches. The vertical positions rate slower than the horizontal and an effective correction consists in fitting a stronger mainspring.

The use of the watch rate recorder has made the practice of position adjusting entirely practical. A study of the following examples should prove interesting.

(NOTE. Wrist watches are adjusted preferably to dial up, dial down, and pendant down. For greater precision, twelve down may be added. Pocket watches are adjusted to dial up, dial down, and pendant up. Railroad grades are adjusted to dial up, dial down, pendant up, pendant right, and pendant left.)

Adjustment 1.

Watch — 10½ lignes, 15 jewels

Repairs — cleaned, demagnetized, mainspring fitted

The first test after repairing showed an excessively slow pendant down rate:

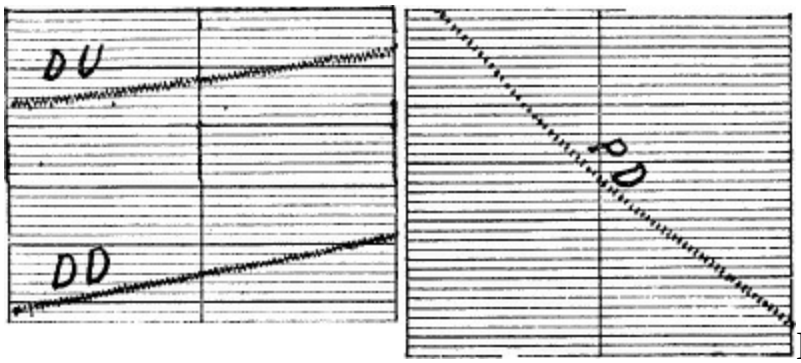

Because a poise error was suspected, the balance spring was removed and the balance was tested on the poising tool. A small poise error was found and accordingly corrected. With the spring replaced, the balance was placed in the brass truing calipers and the spring was examined for truth at the collet. A slight eccentricity at the inner terminal was found. After careful truing of the spring and reassembling the watch, the next test showed the following rate:

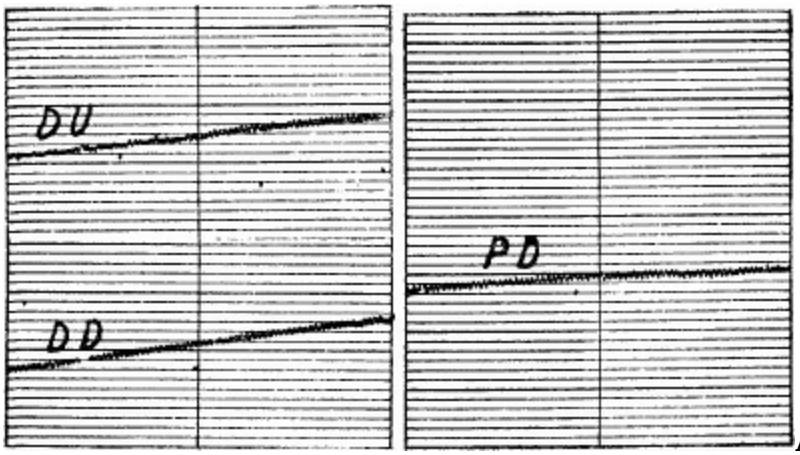

Adjustment 2.

Watch — 5½ lignes, 17 jewels

Repairs — staff fitted, balance poised, cleaned

The rates shown in this example are similar to the preceding one.

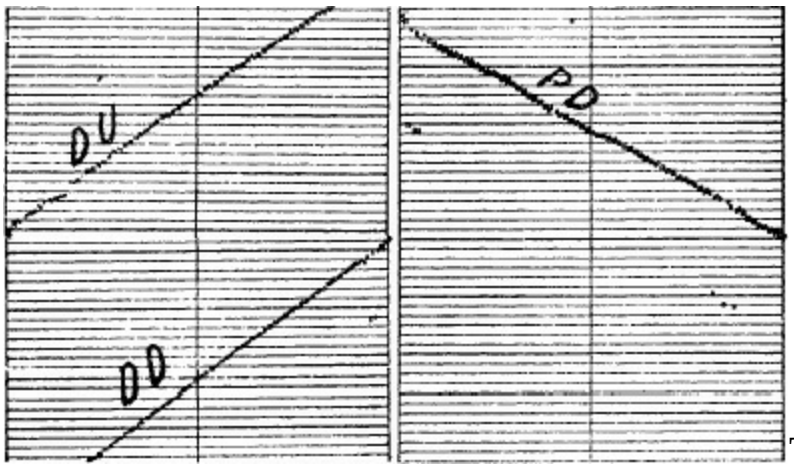

The usual routine examination was made and the following faults were noted: (1) an eccentric motion of the spring at the collet, (2) balance motion slightly less than 1½ turns, and (3) regulator pins open.

After correcting the above conditions and re-regulating, the final test showed the following rate:

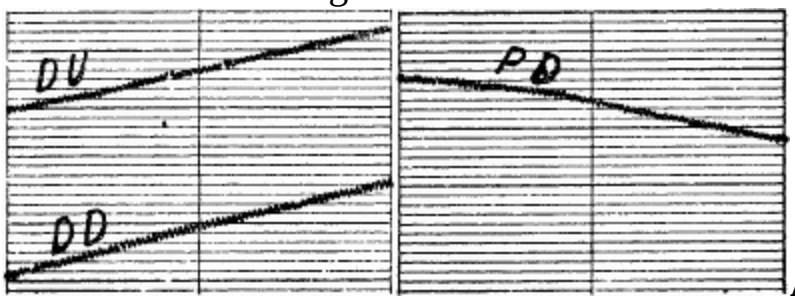

Adjustment 3.

Watch — 5½ lignes, 15 jewels

Repairs — balance poised, cleaned

The first test showed a considerable loss in the pendant down position.

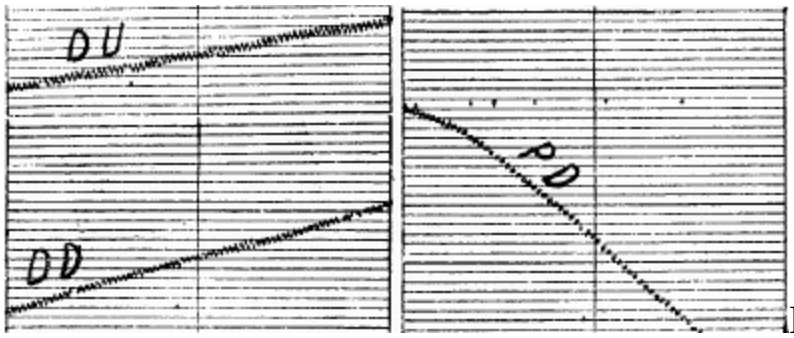

Examination showed a perfectly true balance spring and correctly adjusted regulator pins. Since the balance had been poised, there remained only one practical correction and this had to do with the motion of the balance. Checking showed a good motion but it could be increased slightly without vibrating in excess of 1½ turns.

Acting on the supposition that an increased balance arc would accelerate the pendant down position, we fitted a stronger mainspring. After regulating, the final test showed a much improved rate.

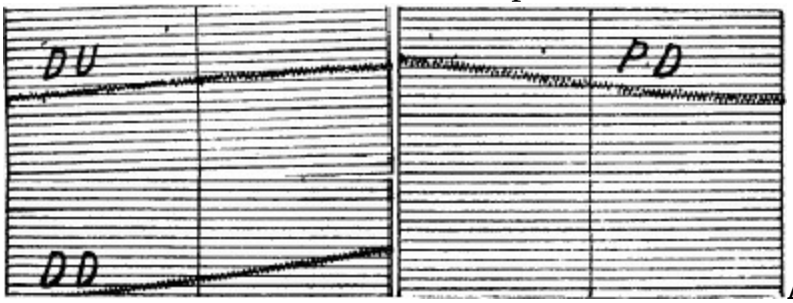

Adjustment 4.

Watch — 5½ lignes, 17 jewels

Repairs —cleaned

The first test showed the following rate:

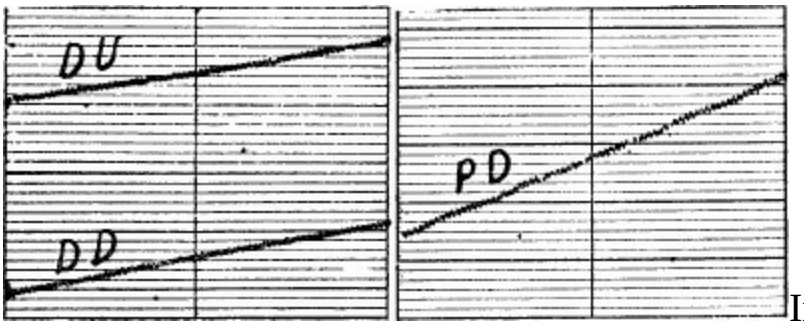

In this example the pendant down rate was fast, which, in wrist watches, is most unusual. A poise error was suspected and the watch was tested in four vertical positions. The

rates were found to be practically equal in all positions. Any error of poise was therefore ruled out.

The regulator pins were next examined and the outer coil of the balance spring was found to rest against the inner pin for all but the longest vibrations. The outer coil was adjusted to vibrate equally between the pins and, after regulating, the following rate was attained:

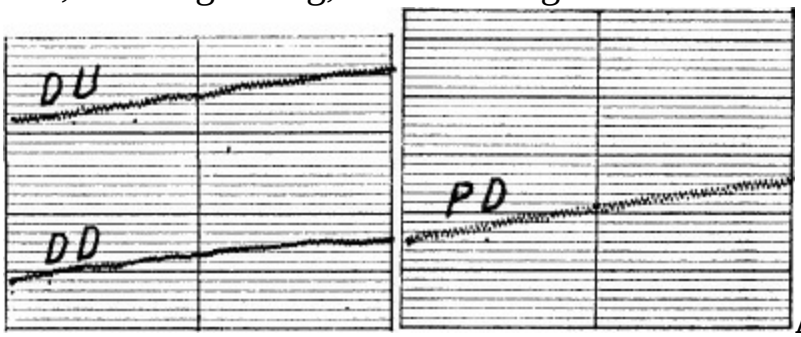

Adjustment 5.

Watch — 10½ lignes, 15 jewels

Repairs — cleaned

The record below indicates a condition of balance motion much too long. The normal rate is shown for a few seconds but, as the motion increases, overbanking takes place, resulting in an abnormally fast rate.

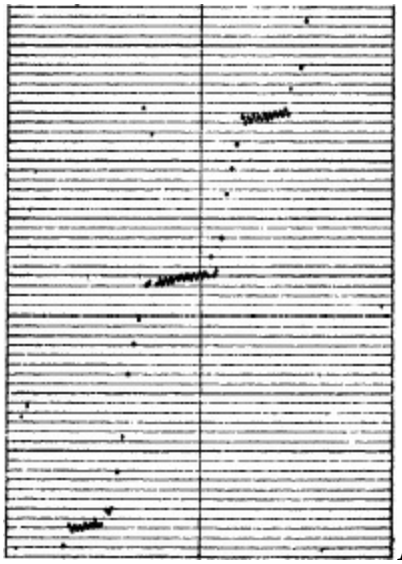

A weaker mainspring was fitted and, without doing anything else to the watch, the following rate was attained:

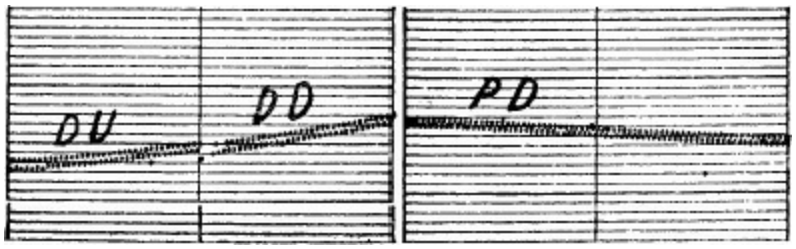

Watches That Stop

The following examples have to do with the difficulty of stopping. We do not pretend to have covered the various causes for stopping, but have indicated, we believe, some of the unusual ones.

Example 1.

A 6-size watch of American make with compensating balance was cleaned and the balance trued and poised. The watch gave good service for about three months, when the owner brought it back complaining that the watch lost considerable time during the night.

The watch was tested in every conceivable way. It would run during the day and keep time. In the morning the watch would be several hours slow but running. Further examination showed an unusual condition. The clearance between the balance screws and the train wheel bridge was so small that, during the night when the temperature was cold, the outward bending of the rims was sufficient to cause the screws to touch the bridge and stop the watch. During the morning hours when the temperature rose, the watch would start of itself. The watch was repaired in the late summer months and ran consistently, but with the coming of cooler weather the diameter of the balance became longer.

The correction consisted in adding a small pair of balance screws and removing the dial washers from under the highest screws.

Example 2.

A small and very narrow baguette watch was brought in by a lady who explained that the watch had been repaired many times but no one had ever been able to make it run for longer than two weeks.

The watch was given a complete overhaul; a new main spring was fitted and tested on the watch rate recorder. An excellent record was shown but the watch would run perhaps a day or two and then stop. Each time when the movement was removed from the case, it would be running. The movement was taken apart and the wheels carefully examined. From all appearances it

stopped in the train but no such error could be discovered. Finally we observed, accidentally, that the center wheel moved when the crown was touched. Further examination showed that the pivot of the winding stem touched the pinion of the center wheel. The repair was simple — merely shortening the pivot of the stem. This corrected, the watch caused no further trouble.

Example 3.

A very small, high-grade Swiss watch, made some thirty years ago, was asserted by the owner to have been cleaned some three weeks before, in a distant city. The owner complained that the timekeeping was not consistent and occasionally stopped.

The balance was removed and examination showed that the pivots were in good condition. The balance cap jewels were removed and one cap jewel was found to be completely covered with oil. The other cap jewel showed the proper amount of oil. The one jewel with too much oil was cleaned and replaced. The balance was cleaned and put in position in the watch. The balance now vibrated to a full 1½ turns, which was not the case before the correction. The watch was tested for five days. It kept good time and did not stop.

Example 4.

An old model Swiss wrist watch was cleaned, timed, and placed on the rack for observation. After two hours we discovered that it had stopped. Examination showed that the hour hand was wedged tight. A slight movement of the hour hand freed the hands and the watch started. The hands were tried in several positions and found to be free in every instance. Again setting to time, the watch was placed in the rack. On the next morning the watch was found to have stopped during the night. Examination showed that the hour hand was wedged tight.

The dial was removed and the dial washer was taken out. The dial was replaced without the washer, and the end shake noted. The end shake was rather excessive and it occurred to us that perhaps the end shake could be reduced and the dial washer dispensed with. This was accordingly done by bending down the dial near the middle. Replacing the dial (this time without the washer) the hour wheel was checked and found satisfactory as regard to freedom. The hands were fitted, checked in several positions, and set to time.

The watch ran satisfactorily and caused no further trouble.

Ordinarily dial washers can be recommended, but the washers do not prevent the hour wheel from climbing if there is a tendency to do so. It is logical to assume that since the hour wheel was free for several hours running, it would remain free if the climbing could be prevented. If the dial cannot be shaped to reduce the hour wheel shake, use a thick washer without spring action.

Example 5.

A 15-jewel traveling clock with alarm was cleaned and balance pivots polished. After running three days it stopped. The hour wheel was found to be tight. Applying pressure with the tweezers on the hour hand, the hour wheel was freed and the clock started. Testing the hour wheel in several positions showed no error. However, wedging of the hour wheel *does* take place seemingly in spite of all tests. One may reason that slightly broaching out the hour wheel would correct the trouble. This, however, is the very worst practice. Never broach out the hour wheel unless it actually fits tight on the cannon pinion.

The error in this instance was corrected in the following manner: The cannon pinion was placed in the lathe and the points where the hour wheel rides were smoothed with the Arkansas slip and then polished with the steel burnisher. Now fitting a flat-faced stump to the die of the staking tool, the hour wheel was placed thereon, wheel side up, and, with a round-faced punch, the hole in the hour wheel was closed. Next the hole was broached out to fit the cannon pinion close but free. Again the hour wheel was placed on the stump, this time with the pipe upward, and the end of the pipe was closed with a taper end punch. Lastly, the pipe was broached out to fit the cannon pinion. In this manner the hour wheel is made to fit the cannon pinion closely and with a minimum of side shake. Tilting is thus avoided and the hour wheel will move up and down without binding. After assembling, the clock caused no further trouble.

In good grade alarm clocks, the alarm is set off by an upward movement of the hour wheel. Hence, a smooth action of the wheel is required. This is often a source of trouble and careful examination should be routine procedure.

Problems Related to Pendulum Clocks

Example 1.

An 8-day pendulum mantel clock was cleaned and repaired by a student apprentice. When the clock was set up and running, it ran with reasonable accuracy for three days, when it started to lose, and after seven days the clock was ½ hour slow. Obviously, something was definitely wrong. Examination showed deep grooves cut in the pallets.

The escape wheel was shifted on its arbor so that the teeth worked on parts of the pallet that were not worn. The next test showed a rate within 2 minutes a week without even changing the length of the pendulum.

Example 2.

A popular-priced grandfather clock with hour and half-hour striking movement, weight powered and fitted with a seconds pendulum, was cleaned, holes closed, and pallets polished. After the movement was set up on an especially designed shelf, it ran for about four days.

The pallets had been broken and some workman had filed up a piece for one pallet and soft soldered it to the remainder of the pallet frame. We touched the pallet with a file and found it to be rather soft. The piece was removed by heating the soft solder and then heated to a cherry red to harden it. After cleaning and polishing, the piece was soft soldered to the pallet frame. After the escapement was again assembled, the clock ran satisfactorily.

The pallets must be glass hard. There seems to be a drag if they are soft, sufficient to cause stopping.

Example 3.

A fine French clock was cleaned. No other repairs seemed necessary, so the movement was set up in the case, started, and set to time. The clock kept good time while running, but it would stop after three or four days, seemingly without reason, for if re-started it would run another two or three days without additional winding.

Past experience served us in this case. A new time spring was fitted and the clock caused no further trouble.

French clocks have a reputation for acting in this manner. They are fine

timekeepers but good mainsprings and precision adjustments are essential in order for them to run at all.

PART II

THE MECHANICS OF HOROLOGY

PART II

Chapter One

WHEEL WORK OF PENDULUM CLOCKS

THE PURPOSE of *wheels* in a clock is to govern the movement of the hour and minute hands while the *escapement* makes a required number of beats. This would naturally require wheels that gear into *pinions** so as to change the velocity of the several wheels in order to perform the necessary function of registering time.

---

* A pinion is a smaller wheel with teeth called leaves working in connection with the larger wheel.

Calculating the Number of Turns

Let us examine the relationship that exists between a wheel and a pinion of a given number of teeth and leaves. Assume that a wheel of 96 teeth drives a pinion of 12 leaves. It is evident that after the pinion has made one turn, the wheel has advanced 12 teeth. With two turns of the pinion, the wheel has advanced 24 teeth, etc. It follows that in order to obtain the number of turns of the pinion to one turn of the wheel, we divide the number of teeth in the wheel by the number of leaves in the pinion.

The usual practice is to make use of the following formula, in which *W* is the wheel and *p* is the pinion:

$$\frac{W}{p} = \text{number of turns of the pinion.}$$

Substituting the numerical values, we have: 96

$$\frac{96}{12} = 8 \text{ turns of the pinion.}$$

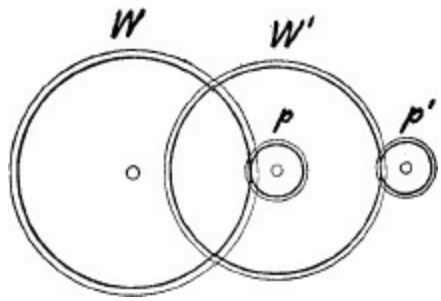

Figure 1.

Now consider a combination of two wheels and pinions as shown in Figure 1. The wheel *W* drives the pinion *p*. The axis of the pinion *p* carries the wheel *W′*, which, in turn, drives the pinion p′.

$$\text{Therefore: } \frac{W}{p} = \text{number of turns of } p$$

$$\text{and further: turns of p} \times \frac{W'}{p'} = \text{number of turns of } p'.$$

It is more convenient, however, to write the formula as follows:

$$\frac{W}{p}\,\frac{W'}{p'} = \text{number of turns of } p'.$$

CLOCK TRAINS

A group of wheels and pinions performing a single function is called a *train.* The simple clock has two trains: the *main train* and the *dial train.*

The main train changes a slow motion to a fast one with the particular purpose of causing the wheel that carries the minute hand to make one turn in the same time that the escapement makes a required number of beats.

The dial train, on the other hand, changes a fast motion to a slow one for the purpose of governing the distance the hour hand travels to one turn of the minute hand.

Main Train of Weight-driven Clocks

For the purpose of describing the main train, let us consider the standard regulator movement. This movement is of simplest possible construction, containing only four wheels, dial train excepted. It is powered by a weight and is usually fitted with a pendulum beating seconds.

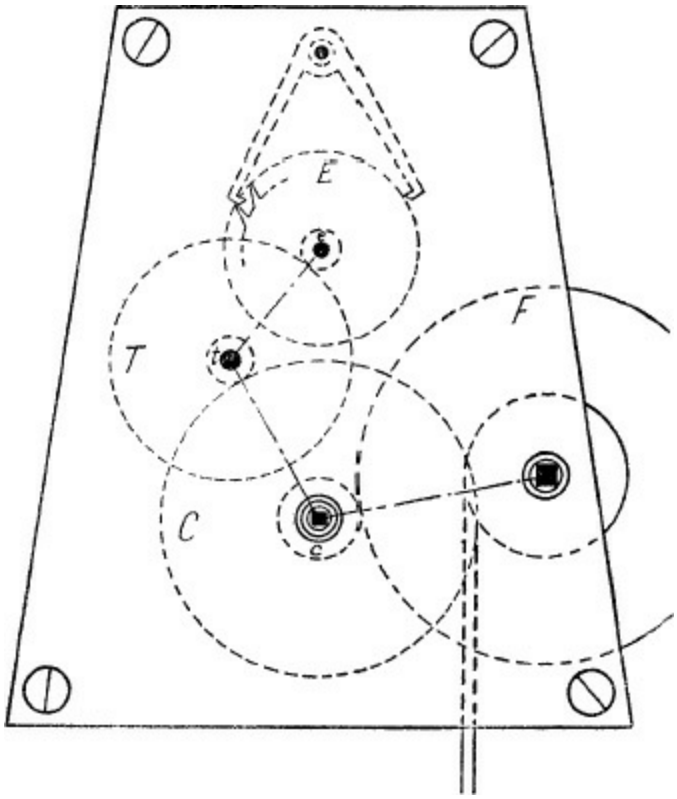

Figure 2. Regulator movement. Showing arrangement of the train.

Figure 2 shows a regulator movement of the American type.

The *first wheel*, sometimes called the *great wheel*, has attached to it a grooved barrel upon which a cord or metal cable is wound. To the end of the cord is attached the weight. The first wheel drives the second or center pinion to which is attached the center wheel. (Note that the second pinion is, in reality, the first pinion, but for convenience it is given the same name as the second or center wheel of which it is a part.) The center wheel carries the minute hand and, of course, makes one turn in an hour. The center wheel drives the third pinion and wheel, which in turn drive the escape pinion and wheel.

Calculating the turns of a complete train. The formula for the regulator main train is as follows:

$$\frac{\mathrm{FCT}}{\mathrm{cte}} = \text{number of turns of the escape wheel}$$

in which the capital letters *FCT* indicate the first, center and third wheels and the small letters *cte* indicate the center, third and escape pinions.

Substituting the numerical values we have:

$$\frac{144 \times 96 \times 90}{12 \times 12 \times 12} = 720 \text{ turns of the escape wheel.}$$

Since the center wheel makes 12 turns to 1 of the first wheel, and observing that the center wheel makes one turn in an hour, it follows that the first wheel makes $^1/_{12}$ turn in an hour. Thus by dividing 720 by 12, we learn that the escape wheel makes 60 turns in an hour or 1 turn a minute.

Calculating the number of beats. The escape wheel in the regulator movement must deliver 60 impulses to the pendulum with each turn in order to register seconds. To accomplish this, the escape wheel must have 30 teeth, for each tooth delivers 2 impulses, first to the receiving pallet and later to the discharging pallet. Eliminating the first wheel and letting *E* indicate the escape wheel, the formula now reads:

$$\frac{\text{CT2E}}{\text{te}} = \text{number of beats per hour.}$$

Substituting the numerical values we have:

$$\frac{96 \times 90 \times 2 \times 30}{12 \times 12} = 3600 \text{ beats per hour.}$$

Since the escape wheel makes one turn in a minute, a second hand may be fixed to the extremity of the escape pinion. This is the usual practice in the construction of regulators. A long pivot on the escape pinion extends through a hole in the dial and the second hand is fitted by friction.

Main Train Of Spring-Driven Clocks

Pendulum clocks being made in such a large variety of types and sizes from small novelty clocks to huge tower clocks, it follows that the pendulum may vary in length from about 4 inches to 13½ feet.

Trains vary in construction accordingly, with more or less wheels and numerous types of escapements. If the clock is to be fitted with a short pendulum, resulting in a more rapid vibration, it is desirable to add another wheel to the train. These clocks are, of course, driven by a mainspring and the formula below has a fourth wheel added to the train. The capital letters *C*, *T*, *F*, and *E* indicate the center, third, fourth, and escape wheels, and the small letters *t*, *f*, and *e* indicate the third, fourth, and escape pinions.

$$\frac{\text{CTF2E}}{\text{tfe}} = \text{beats per hour.}$$

Shown below is a numerical example:

$$\frac{64 \times 48 \times 40 \times 2 \times 15}{8 \times 8 \times 8} = 7200 \text{ beats per hour.}$$

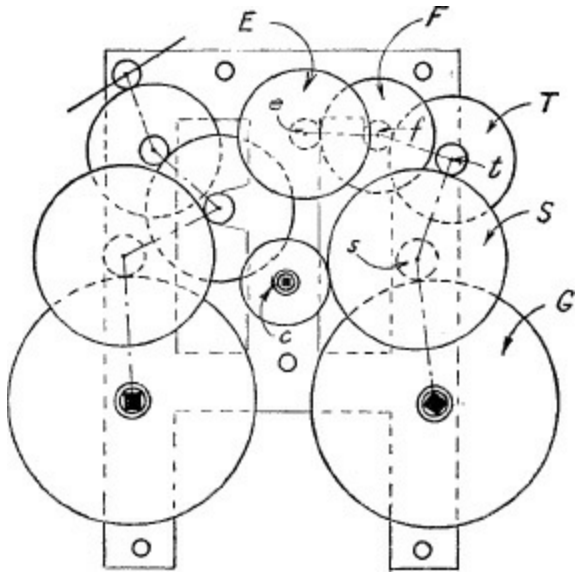

Figure 3. Movement of American striking clock with top plate removed showing the arrangement of timing and striking trains.

The American mantel clock. Consider now the main train of the clock movement shown in Figure 3. It is the type generally used in American hour and half-hour striking clocks and in some popular-priced wall clocks.

Note that the first wheel *G* does not gear into a center pinion. Instead it gears into a second pinion *s*. The second wheel *S* drives two wheels. These we shall call the third pinion *t*, which stands above the second wheel *S* and the center pinion *c*, which is situated midway between the timing and striking trains.

The figuring of a train thus arranged becomes more complicated than the one just considered and involves a more elaborate mathematical calculation to determine a train so as to function with a required number of beats. Two operations are required. Formula No. 1 and numerical values are shown as follows: STF

$$\text{No. 1}\ \frac{\text{STF}}{\text{tfe}} = \text{number of turns of escape wheel to one of the second wheel.}$$

$$\frac{60 \times 42 \times 42}{8 \times 7 \times 7} = 260 \text{ turns.}$$

The escape wheel makes 260 turns to one of the second wheel. However, since the second wheel does *not* make one turn in an hour, and, since we know that this is required of the center pinion, it follows that the number of turns the escape wheel makes in an hour may be found by dividing the *ratio* of the center pinion to the second wheel into 260. Now the center pinion contains 26 leaves and the second wheel 60 teeth. Dividing 26 into 60 we find that the ratio between the two mobiles is $2^4/_{13}$. By dividing $2^4/_{13}$ into 260 we determine the number of turns of the escape wheel in an hour. Therefore:

$$260 \div \frac{30}{13} = \frac{260 \times 13}{30} = 112\tfrac{2}{3} \text{ turns of escape wheel in one hour}$$

We now wish to determine the number of beats the escapement makes in an hour — the escape wheel containing 48 teeth.

$$112\tfrac{2}{3} \times 2 \times 48 = 10{,}816 \text{ beats per hour.}$$

It is more convenient, however, to calculate the beats per hour by using one additional operation (Formula No. 2) as shown below.

$$\text{No. 2}\ \frac{\text{N2E}}{\frac{\text{S}}{\text{c}}} = \text{beats per hour.}$$

Thus, by cancellation, the problem is solved more quickly:

$$\frac{260 \times 2 \times 48 \times 26}{60} = 10{,}816 \text{ beats per hour.}$$

POWER UNIT OF WEIGHT-DRIVEN CLOCKS

Returning for further study of the weight-driven clock, we are confronted with certain problems. Suppose the clock is to run eight days. The size of the barrel and the length of fall of the weight are points to be reckoned with. For these we must resort to two formulas. First we must determine the number of turns of the barrel for eight days of running:

$$\frac{N \text{ turns} \times F}{c} = 24 \times 8 \text{ days}$$

in which N = turns of first wheel
F = first wheel
c = center pinion

Substituting:

$$\frac{N \times 144}{12} = 192 \text{ hours}$$

$$N = \frac{192 \times 12}{144}$$

$$N = 16 \text{ turns}$$

Having determined the turns of the barrel for eight days of running, we may, by means of the formula below, determine: (1) the length of fall of the weight for a given diameter of the barrel or (2) the diameter of the barrel for a given length of fall of the weight.

Stating the formula:

$$N = \frac{L}{\pi D}$$

in which N = turns of the first wheel
L = length of fall of the weight
π = 3.1416 relation of diameter to circumference
D = diameter of the barrel

Problem:

What would be the diameter of a barrel making sixteen turns, if the case permitted a fall of 6 feet for the weight ?

$$16 = \frac{72}{3.14 \times D}$$

$$D = \frac{72}{3.14 \times 16}$$

D = 1.4 inches diameter of barrel

Problem:

What would be the length of fall of the weight if the diameter of the barrel is 1½ inches? The barrel makes sixteen turns.

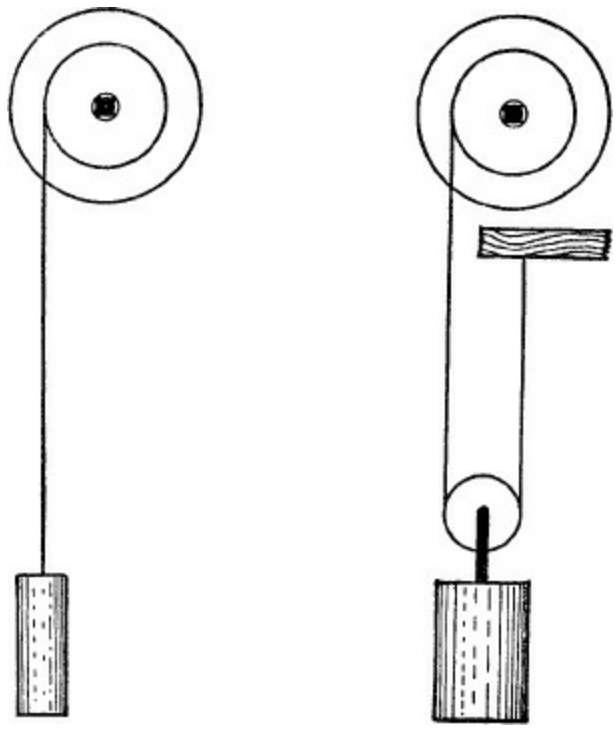

Figure 4.

Given the formula: $N = \frac{L}{\pi D}$

$$\frac{L}{\pi D} = N$$

$$\frac{L}{3.14 \times 1.5} = 16$$

$$L = 16 \times 3.14 \times 1.5$$

$$L = 100.48 \text{ inches or } 8.4 \text{ feet}$$

Double cord. In order to reduce the fall of the weight without reducing the barrel diameter to impractical proportions, it is sometimes desirable to use a double cord as shown in Figure 4. In this case the weight falls half as fast, but twice the weight is required.

Maintaining power mechanism. When a weight clock requires winding, the act of winding tends to reverse the train, possibly jamming the escapement and thus interfering with the timekeeping. A maintaining power device overcomes this difficulty and the clock is kept going.

The mechanism, invented by John Harrison in 1745 and still used in regulators, is shown in Figure 5. The winding ratchet wheel *WR* is attached to the barrel and both are fixed to the arbor *A*. The maintaining ratchet wheel

lies outside the winding ratchet wheel and is free to turn on the arbor. Lying next is the first wheel and it, too, is free of the arbor and also free of the maintaining ratchet.

Action of the maintaining mechanism. The winding click *WC* is pivoted to the maintaining ratchet wheel *MR*, and its point engages the teeth of the winding ratchet wheel *WR*. The clock is running by its weight and the two ratchet wheels turn together. The maintaining springs *S* and *S′* are soon under tension and all parts are now turning in the direction of the arrow *B*. Now suppose the clock is being wound. The winding ratchet wheel will be turning in the direction of the arrow *C*. The maintaining ratchet wheel is held from turning backwards by the maintaining click *MC*, which is pivoted to the clock plate. The force created by the maintaining springs ***S*** and *S′* drive the first wheel in the direction of the arrow *B*, thus providing the necessary power to the train as the clock is being wound.

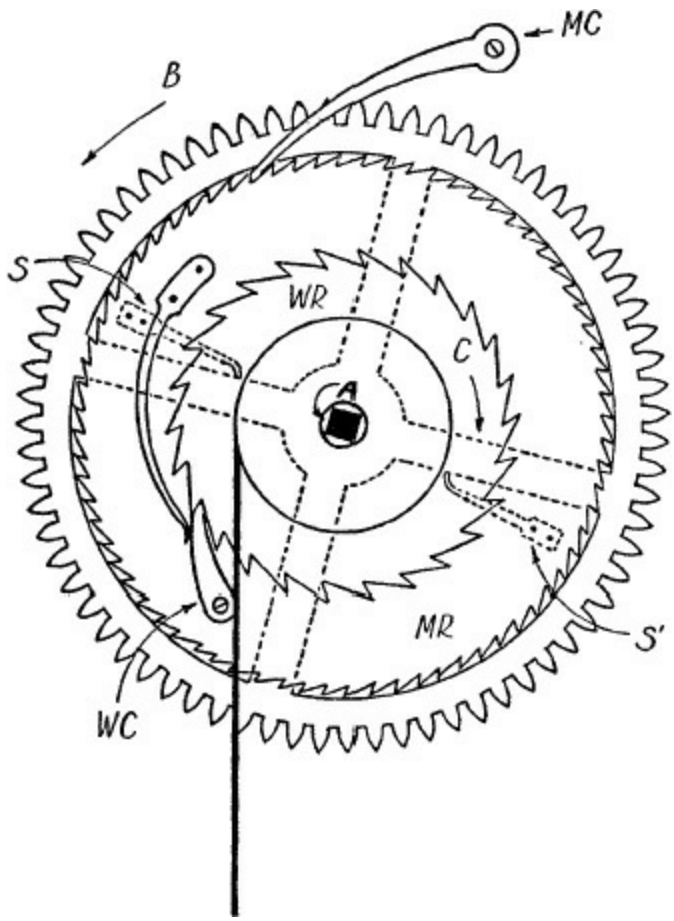

Figure 5. Maintaining power mechanism.

POWER UNIT OF SPRING-DRIVEN CLOCKS

There are two types of power units in use in spring-driven clocks. The lower-priced clocks use what is termed the *open spring* — that is, the spring is not enclosed in a barrel. The outer end of the spring is secured around a piller that lies between the plates and the inner end hooks on an arbor that carries the first wheel. A ratchet wheel is attached to the arbor and the click is secured to the first wheel. In winding the spring, the power is taken off the train, but, when the winding ceases, the power is again delivered to the first wheel through the ratchet wheel and click and thence to the train.

In the better grade clocks, the spring is enclosed in a barrel called the *going barrel.* The spring is wound through the arbor; the arbor carries the ratchet and the click is attached to the plate. Since the spring is wound from the center and the outer end of the spring is attached to the barrel, it follows that the power is always maintained to the train when spring is under tension. Springs fitted to going barrels should occupy one-third of the space between the barrel wall and the arbor.

Further information concerning mainsprings may be found in the part devoted to balance-wheel timekeepers.

THE DIAL TRAIN

Figure 6 shows the dial train of the type used in the French mantel clock. The construction, however, is practically the same in all types of clocks.

The center wheel, which turns once an hour, is fitted near the center of the movement and has a long arbor which extends through a hole in the dial. A tube with a pinion at its base, called the *cannon pinion* (*C*, Figure 6), fits with a slight friction on the center arbor and turns with it when the clock is running. In setting the hands to time, the entire dial train turns independent of the center arbor. The upper end of the cannon pinion carries the minute hand and the pinion at the base drives the minute wheel *M.* To the minute wheel is secured the minute pinion m, which in turn, drives the hour wheel *H.* This last wheel fits freely on the cannon pinion and carries the hour hand. The dial train is so designed as to cause the hour hand to make one turn to twelve turns of the minute hand.

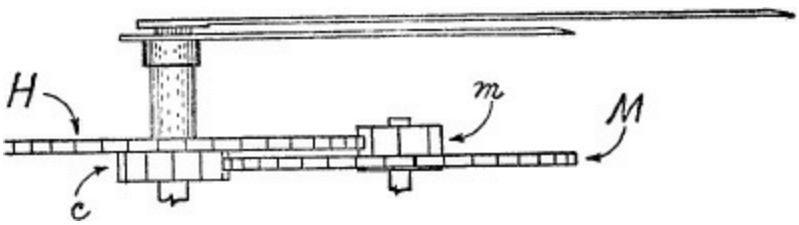

Figure 6. Dial train

The formula reads as follows, using the letters as given above to indicate the wheels and pinions:

$$\frac{\mathrm{MH}}{\mathrm{cm}} = 12$$

Substituting the numerical values:

$$\frac{60 \times 42}{15 \times 14} = 12$$

The dial train may be formed by many different combinations, the only requirement being that the combined ratios equal 12.

$$\frac{32 \times 60}{16 \times 10} = \frac{35 \times 48}{14 \times 10} = \frac{48 \times 49}{14 \times 14} = \frac{48 \times 120}{48 \times 10} = 12$$

In the fourth example, the cannon pinion and minute wheel have the same number of teeth, necessitating a ratio of 12 to 1 between the minute pinion and the hour wheel. This combination is often used in hall clocks where the pins, which release the striking or chiming mechanisms, are fitted to the minute wheel.

Another function attached to the dial train is found in rack and snail striking clocks. The snail is generally mounted on the pipe of the hour wheel. When assembling the dial train the hour wheel must be fitted in such a manner that the rack drops to the lowest step on the snail. This is necessary so that the clock will strike correctly.

PART II

Chapter Two

WHEEL WORK OF BALANCE WHEEL CLOCKS AND WATCHES

THE ANALYSIS of clock trains given in the previous chapter applies in a general way to balance-wheel timepieces. Since the vibrations of the balance are more rapid than that of the pendulum, it is necessary to add an extra wheel to the train. This extra wheel is called the *fourth wheel and pinion*, which, in most watches, turns once a minute. Usually the pinion is provided with a pivot of sufficient length to reach through a hole in the dial. To this long pivot a second hand is fitted.

Main Train

Below is shown the formula for the main train from center wheel to fourth wheel, in which the capital letters *C* and *T* indicate the center and third wheels and the small letters *t* and *f* indicate the third and fourth pinions.

$$\frac{CT}{tf} = \text{turns of the fourth wheel}$$

Substituting $\frac{CT}{tf}$ by their numerical values we have:

$$\frac{80 \times 75}{10 \times 10} = 60 \text{ turns of the fourth wheel}$$

Adding the escape pinion *e* to the train, the formula reads:

$$\frac{CTF}{tfe} = \frac{80 \times 75 \times 80}{10 \times 10 \times 8} = 600 \text{ turns of the escape wheel}$$

The calculation (page 116) shows that the escape wheel and pinion make 600 turns an hour or 10 turns a minute.

Calculating the number of beats. The escape wheel in most watches

contains 15 teeth and delivers twice as many impulses to the balance. Letting *E* indicate the escape wheel and *e* the escape pinion, the formula, from fourth wheel to escape wheel, reads as follows:

$$\frac{F2E}{e} = \frac{80 \times 2 \times 15}{8} = 300 \text{ beats per minute or 5 beats a second}$$

Multiplying the 300 beats per minute by 60 we find that the watch makes 18,000 beats per hour, which is also shown by giving the complete formula from center wheel to escape wheel.

$$\frac{CTF2E}{tfe} = \frac{80 \times 75 \times 80 \times 2 \times 15}{10 \times 10 \times 8} = 18{,}000 \text{ beats per hour}$$

Fast and slow trains. Not all watches make 18,000 beats per hour. Some of the older models make 14,400 beats or 16,200 beats per hour. Since the fourth wheel makes 60 turns a minute, it is obvious that the trains differ only in the ratios between the fourth wheel and escape pinion. The trains are as follows:

$$\frac{F2E}{e} = \frac{72 \times 2 \times 15}{8} = 270 \text{ beats per minute}$$

$$\frac{F2E}{e} = \frac{64 \times 2 \times 15}{8} = 240 \text{ beats per minute}$$

Small wrist watches often have fast trains, as the following formulas show:

$$\frac{CTF2E}{tfe} = \frac{64 \times 66 \times 60 \times 2 \times 15}{8 \times 8 \times 6} = 19{,}800 \text{ beats per hour}$$

$$\frac{CTF2E}{tfe} = \frac{60 \times 54 \times 48 \times 2 \times 15}{6 \times 6 \times 6} = 21{,}600 \text{ beats per hour}$$

PORTABLE CLOCKS

Portable clocks are generally designed to run eight days. In these the main train is the same as the watch except that a wheel is added between the barrel and the center wheel.

Dial Train

The dial train for balance timekeepers does not differ in principle from that used in pendulum clocks. The number of teeth and leaves differ

proportionately, but we list herewith the most used combinations found in balance wheel clocks and watches.

Hour wheel	*Minute pinion*	*Minute wheel*	*Cannon pinion*
42	14	48	12
32	8	24	8
32	8	27	9
32	8	30	10
40	8	24	10
36	8	32	12
48	8	28	14
48	10	30	12
48	12	30	10

The Barrel and Its Mainspring

The earliest watches used the fuzee to equalize the force of the mainspring just as the chronometer has this feature even to this day.* Later when the fuzee was discarded, a stop work was fitted, usually to the barrel cap. Its purpose was to make use of the middle portion of the mainspring so as to equalize the motive power. In present-day watches the stop work is unnecessary, since the quality of the mainsprings has been greatly improved. Furthermore, the recoil click releases the mainspring from excessive friction between the coils, which was, in part, the purpose of the stop work. The fuzee is now obsolete in watches, and likewise the stop work. Both would be troublesome rather than helpful in the superior engineering of modern watches.

---

* A study of the chronometer and the fuzee belong to a separate and specialized field of horological practice and does not come within the scope of this book. See *Horology* by J. Eric Haswell, Chapman and Hall, Ltd., London.

Going barrel. The box for the reception of the mainspring in most modern watches is of the type called the *going barrel*. In this type the arbor is turned in winding the spring. The barrel is covered with teeth and, obviously drives the train.

Motor barrel. The motor barrel differs from the going barrel in that the

barrel, proper, is turned in winding the spring. In this case the first wheel is attached to the barrel arbor. The train is propelled, therefore, through the barrel arbor.

Calculating the number of hours a watch will run. The barrel and its mainspring are so designed as to run about 36 hours. The ratio between the number of teeth in the barrel and the leaves in the center pinion, together with the length of the spring, determines this. In a given watch the barrel contains 75 teeth and the center pinion 12 leaves. The center wheel makes 6¼ turns to one of the barrel. When we observe that the center wheel makes one turn in an hour, it follows that the barrel makes one turn in 6¼ hours. By counting the number of turns of the ratchet wheel, we learned that it takes 6½ turns to completely wind the spring. Thus by multiplying 6¼ (hours for one turn of the barrel) by 6½ (turns of the barrel) we get 40+, which equals the number of hours the watch will run.

The mainspring should run the watch not less than 32 hours; 36 to 40 hours is better — in fact, some of the finest watches will run 45 hours and longer.

Calculating the correct thickness of the mainspring. We have learned that the balance must take a motion of 1½ turns, and, if the watch is in good order, this motion is realized by adopting a spring of the required strength. Research has shown that the strength of the spring is proportional to its width — that is, a spring twice as wide develops a force twice as strong. As to thickness, the ratio is different, being proportional to the cube of its thickness. This means that a spring twice as thick develops a force eight times as strong.

This is shown by noting that the measurement of thickness conforms closely to the diameter of the barrel. For example, a reasonably accurate rule for determining the proper thickness of the spring is as follows:

Measure the full diameter of the barrel and divide the figure by 100. The quotient is the thickness of the spring.

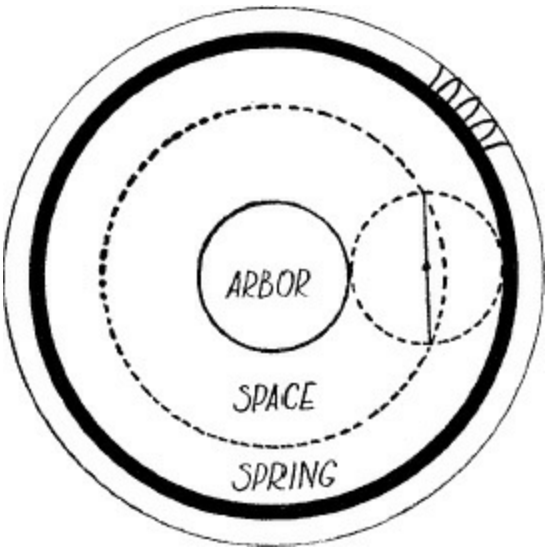

Figure 7.

The metric system of measurement is used in the above calculation.

Calculating the correct length of the mainspring. The length of the spring need not be calculated in so many inches. Instead we note the space that the spring occupies in the barrel. Assuming that the correct strength has been ascertained, the correct length is realized when the spring occupies two-fifths of the space between the barrel wall and the arbor. Figure 7 shows this clearly.

PART II

Chapter Three

GEARING

THE GEARING of a clock or watch is made up of wheels and pinions whose circumferences are covered with teeth and leaves. The function of a tooth is to press on a leaf in a manner that will cause the pinion to turn with a velocity that is constant to the wheel. This requires that the mobiles have teeth and leaves so shaped as to conform to certain scientific principles.

Principles of Gearing

In order to visualize this point more clearly, let us first assume that there is a circle within the toothed section of the wheel that has a common velocity with a similar circle of the pinion and that these circles touch each other. This would be compared to a roller without teeth driving a smaller roller merely by friction. The circumferences of both rollers would have a common velocity, provided there is no slipping action.

Pitch circles. In a gearing, these circles are called *pitch circles,* and although their location is not so clearly defined, they have a real existence, nevertheless. Figure 8 shows the pitch circles cutting through the middle portion of the teeth. That part of a tooth lying *outside* the pitch circle is called the *addendum.* That part lying *inside* is called the *dedendum.* When a wheel drives a pinion, it will be observed that the addenda of the wheel teeth act only on the dedenda of the pinion leaves.

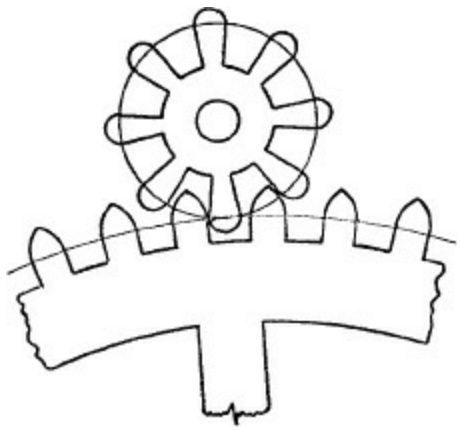

Figure 8.

THE EPICYCLOID AND HYPOCYCLOID

Addenda. The shape of the wheel teeth most used for horological purposes is derived from a geometrical curve called the *epicycloid.* It is formed by means of a point on one circle while rolling on another circle. Figure 9 shows how the curve is formed. The portion of a circle *A* represents the pitch circle of the wheel. A smaller circle *B* equals half the pitch diameter* of the pinion and just touches the pitch circle of the wheel *A.* Let us suppose that circle *B* (called the generating circle) was cut out of cardboard and likewise the pitch circle *A.* Now, placing these circles on a sheet of drawing paper with the generating circle just touching the circle *A*, fit a pencil point to the generating circle at the point where the two circles intersect. Next roll the generating circle on circle *A* without slipping in the direction of the arrow. In so doing, the pencil point will trace out the side of the tooth, indicated by the line *C.*

* Pitch diameter is the diameter of the pitch circle.

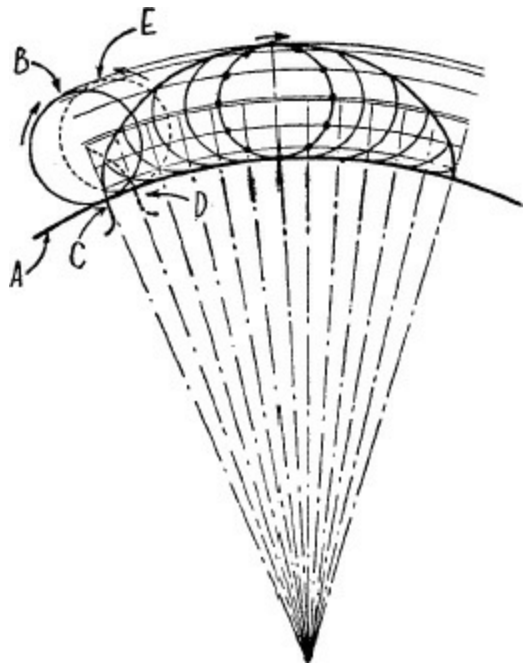

Figure 9.

Width of tooth. It is observed that the analysis of the epicycloid as given above takes account of only one side of a tooth. The question now arises as to how to determine the width of the tooth. This is found by dividing 360 (degrees in any circle) by the number of teeth in the wheel. This gives us, in degrees, the width of one tooth and one space, generally referred to as *circular pitch.*

$$\text{Thus } \frac{360 \text{ degrees}}{80 \text{ teeth}} = 4.5 \text{ degrees circular pitch}$$

The width of the tooth is equal to half the circular pitch; the other half is, of course, equal to the space.

$$\text{Therefore } \frac{4.5 \text{ degrees}}{2} = 2.25$$

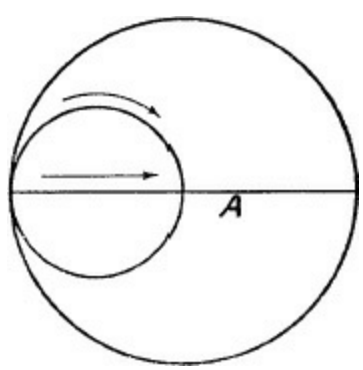

Figure 10.

of which 2.25 degrees is the width of the tooth and 2.25 degrees the width of the space.

Next place the generating circle *B*, Figure 9, 2.25 degrees to the right of line *C*. With the generating circle now centered on line *D* and indicated by the dotted circle *E*, fit a pencil point as previously explained and roll the generating circle to the left. The pencil point will trace out the other side of the tooth as shown by the dotted line *D*. The intersection of the two curves *C* and *D* forms the point of the tooth.

Dedenda. The dedenda of the pinion leaves is determined by the same generating circle that gave us the shape of the addenda for the wheel teeth. The method differs, however, for the generating circle is rolled inside and along the pitch circle of the pinion, producing the radial line *A*, Figure 10.

The line formed by rolling a circle within a circle is called a *hypocycloid.*

ACTION OF CYCLOIDAL GEARING

When a wheel and pinion are made to conform with the above principles of design, a constant and uniform angular velocity from wheel to pinion is maintained. In studying Figure 8 it would seem that the pinion would be driven more rapidly during the latter portion of the lead because of the lengthening of the wheel teeth and the shortening of the pinion leaf. This is not true, however, for there is a slipping action equal to half the width of the tooth, and it is this action that equalizes their angular velocity.

Engaging friction. The incoming tooth of the wheel should begin pressing on a pinion leaf as near as possible to the line of centers, allowing for the fact that this is a varying quantity depending on the number of leaves in the pinion. If the depthing is correct it will be found that ten leaf pinions begin action *on* the line of centers; eight leaf pinions, 10 degrees before the line of centers; and six leaf pinions, 18 degrees before the line of centers. Obviously it is preferable that pinions contain not less than eight leaves in clock work.

Correct Sizes of Wheels and Pinions

Pitch diameter. In order to determine the correct sizes of wheels and

pinions, it is first necessary to find the pitch diameters. For this we proceed as follows: Adjust the male centers of the depthing tool to the two holes in a clock plate in which a wheel and pinion are to rotate. Measure the distance outside the two spindles with a vernier caliper and subtract the diameter of one spindle. This gives us the center distance for one wheel and pinion. To arrive at the pitch diameters, determine the diametrical pitch, which is our next step. The formula reads:

$$\frac{\text{center distance} \times 2}{\text{teeth of wheel} + \text{leaves of pinion}} = \text{diametrical pitch}$$

The diametrical pitch is now multiplied by the number of teeth in the wheel, in order to determine the pitch diameter of the wheel, and in like manner the diametrical pitch is multiplied by the number of leaves in the pinion to determine the pitch diameter of the pinion.

For example, the center distance is 17.15 millimeters; the wheel has 42 teeth; the pinion has 7 leaves. Substituting the numerical values for the above formula, we have:

$$\frac{17.15 \times 2}{42 + 7} = .7 \text{ diametrical pitch}$$

Continuing the problem we find that:

$$.7 \times 42 = 29.4 \text{ mm. pitch diameter of the wheel}$$
$$.7 \times \ \ 7 = \ \ 4.9 \text{ mm. pitch diameter of the pinion}$$

Proof:

$$\frac{29.4 + 4.9}{2} = 17.15 \text{ mm., the distance between centers}$$

The full diameter. The height of the addenda is a varying quantity depending on the ratio of the wheel to the pinion, but the production of theoretically correct gears or even knowing when they exist is not possible with the equipment available to the practical horologist. The usual practice is to add 2.5 diametrical pitches to the pitch diameter of the wheel and 1.25 to the pitch diameter of the pinion.* Experience has shown that the above figures are best for all practical purposes.

---

* There is one exception to the above statement. For the dial train where the pinions drive the wheels and the wheels drive the pinions, as in the case of setting the hands to time, the addenda is

figured as 2 for both wheels and pinions.

We found that the wheel has for its pitch diameter 29.4 millimeters and the pinion 4.9 millimeters. The diametrical pitch multiplied by 2.5 gives us the height of the addenda for the wheel teeth:

$.7 \times 2.5 = 1.75$

Adding this to the pitch diameter of the wheel, we have:

29.4 + 1.75 = 31.15 mm. full diameter of the wheel

Now, figuring the pinion we have:

.7 X 1.25 = .875

4.9 + .875 = 5.775 mm. full diameter of the pinion

We may, however, figure the full diameters with a lot less work by adding 2.5 or 1.25 (addenda) to the number of teeth or leaves. For example:

(42 + 2.5) .7 = 31.15 mm. full diameter of the wheel

(7 + 1.25) .7 = 5.775 mm. full diameter of the pinion

Circular pitch. It will be noted that the definition for circular pitch reads somewhat like the definition for diametrical pitch. The difference is: circular pitch is the division of the *circumference* of a circle (the pitch circle), whereas the diametrical pitch is the division of the *diameter* of a circle (the pitch diameter). In both cases the number of teeth or leaves is the divisor.

We must know the actual width of tooth and space in order to select a cutter to make the wheel. Herein lies the importance of calculating the circular pitch. To attain this we make use of the following formula:

$$\frac{\text{pitch diameter} \times 3.1416}{\text{teeth or leaves}} = \text{circular pitch}$$

Substituting the numerical values:

$$\frac{29.4 \times 3.1416}{42} = 2.199 \text{ mm. circular pitch}$$

The proportion of tooth or leaf to space is usually:

for wheels: one-half of the circular pitch

for pinions: one-third of the circular pitch

Now, continuing with the above we find that:

$$\frac{2.199}{2} = 1.099 \text{ mm., the width of the tooth, and}$$

$$\frac{2.199}{3} = .733 \text{ mm., the width of the leaf}$$

Lantern Pinions

The lantern pinion gets its name from the fact that it looks like an old-fashioned lantern. The leaves are made from round steel pins and are mounted between brass disks. It is used in alarm clocks, popular-priced mantel clocks, and in tower clocks.

The wheel that drives the lantern pinion has cycloidal teeth. The pitch circle for the pinion passes through the central part of the pins.

It is a curious fact that the incoming tooth of the wheel drives the pins of the lantern pinion on the line of centers. There is no exception to this, even in a lantern with six pins. Suppose, however, the lantern pinion was to act as the driver. All of the action would take place before the line of centers and the engaging friction would be very great, in fact, there is some doubt if the train would run at all. It follows, of course, that the lantern pinion is never used as a driver. As a follower it is equal and possibly superior to any other type of pinion, in spite of the fact that it is cheaply made.

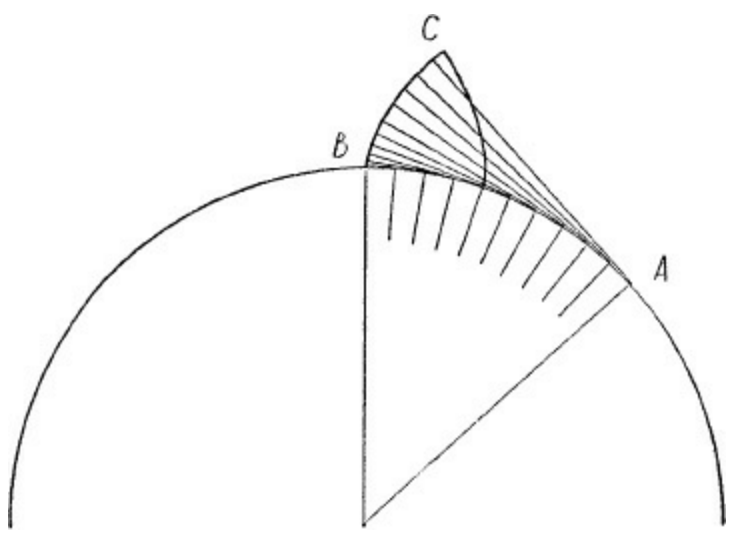

Figure 11.

Involute Gearing

Involute gearing is used in all heavy machinery. It is used in tower clocks and occasionally in smaller clocks. The involute system is increasing in popularity for horological instruments and it does have some advantages.

Figure 11 shows the manner in which the involute tooth is formed. A string fastened to a cylinder at *A* is pulled tightly to the cylinder and reaches to *B*. Grasp the string at *B* and raise it to *C*. The line *BC* forms the side of the involute tooth. The circumference of the cylinder is called the base circle and lies slightly inside the pitch circle.

The teeth of the follower are formed in the same manner; in fact, if we fasten a string between two cylinders as shown in Figure 12 and turn them back and forth, keeping the string tight, the curves for both wheels are formed simultaneously.

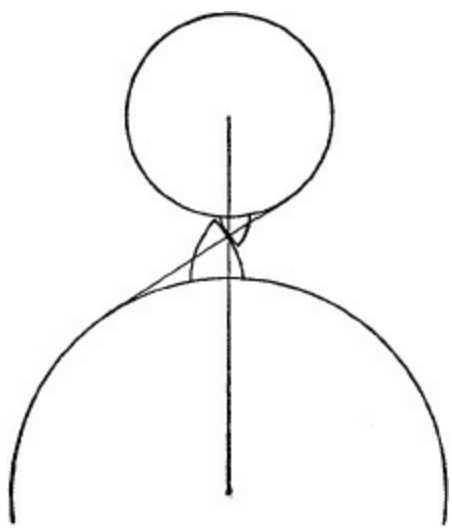

Figure 12.

Action of involute gearing. There is a tendency to thrust the wheels apart in the involute system, but this presents no problem, as the friction between the teeth resists the separating action. A slight discrepancy between the distance of centers is not as serious an error as it would be in the cycloidal system. The slope of the teeth is altered, but this always remains tangent and, furthermore, the velocity is not changed.

Involute gearing serves equally well for drivers or followers.

PART II

Chapter Four

ESCAPEMENTS FOR PENDULUM CLOCKS

THE ESCAPEMENT of a timepiece is a mechanism for the purpose of maintaining the vibrations of the pendulum or balance. Conversely, the pendulum or balance regulates the circular motion of the escape wheel to a required velocity. That type of escapement which interferes the least with the free motion of the vibrating unit will, of course, keep the most accurate time.

We shall discuss in this and the next chapter various types of clock and watch escapements with particular consideration of their merits and defects.

Escapements Using the Pendulum

Probably the earliest escapement for driving the pendulum was conceived by Galileo Galilei in 1610. He made a drawing of it which has been preserved, but a working model was not made until after his death.

Galilei's escapement will be described in this chapter, together with another escapement, the verge, which Huygens used in his pendulum clocks. Following this, modern escapements will be described in detail.

Modern escapements may be divided into four classes. The first is the recoil, the oldest type that is still in use. It is found in mantel clocks, wall clocks, and in grandfather clocks. The second is the dead-beat form generally found in the better-grade movements. The third class is the gravity escapement. In this type the impulse is delivered to the pendulum by means of levers impelled by gravity. Gravity escapements are used almost exclusively in tower clocks. The fourth class is a precision escapement associated with what is termed *free pendulums,* and its use is confined to astronomical and scientific work where great accuracy is required.

Terminology

A study of the escapement involves the use of many special terms that must be defined and understood before we can proceed with an analysis of escapement construction and action. The several parts of modern escapements for clocks are defined as follows:

Escape wheel: The wheel of the escapement that delivers impulse to the pendulum through the medium of the pallets and crutch.

Pallets: That part of an escapement that receives impulse from the escape wheel and delivers impulse to the pendulum.

Receiving pallet: The pallet over which a tooth of the escape wheel slides in order to enter between the pallets.

Discharging pallet: The pallet over which a tooth of the escape wheel slides in order to leave from between the pallets.

Impulse face: The lifting plane of a pallet.

Locking face: The face of a pallet on which a tooth locks. This is a function that takes place only in dead-beat escapements.

Letting off corner: The extreme end of the impulse face of a pallet where a tooth of the escape wheel lets off.

Crutch: A slender metal piece that connects the pallets with the pendulum rod.

Pendulum rod: The connecting link between the suspension spring and the bob.

Suspension spring: A short flat spring that supports the pendulum and permits it to swing to and fro.

Galilei's Escapement

Clocks with the verge escapement and foliot balance were made from about the year 1000 through 1670. During this period of over 600 years, practically no improvement in escapement and balance took place. It is very strange, indeed, that no one, during all this time, ever conceived of the simple device such as the anchor escapement for causing the pendulum to vibrate.

Galilei, after observing the swinging chandelier in the Cathedral of Pisa, suggested that the pendulum could be used for controlling the time in clocks. However he was of the opinion that it was practically impossible manually to keep a pendulum in motion. Nevertheless, before his death in 1642, he made a drawing of an escapement, the mechanical principle of which is shown in Figure 18.

Construction. The teeth of the escape wheel serve only to lock the wheel through the locking piece *L*. Impulse to the pendulum is performed by means of impulse pins secured to the face of the wheel.

Action of the escapement. The pendulum, swinging to the left, carries with it the impulse pallet *I* and also the unlocking pallet *U*. The pallet *U* lifts the locking piece *L*, thus releasing the tooth *T*. The wheel is now free to turn and impulse pin *P* engages the impulse pallet *I*, thereby giving impulse to the pendulum, driving it to the right. Simultaneously the unlocking pallet *U* drops and permits the locking piece *L* to engage the on-coming tooth of the wheel. When the pendulum returns after completing its swing to the right, the unlocking pallet again lifts the locking piece and the action is repeated.

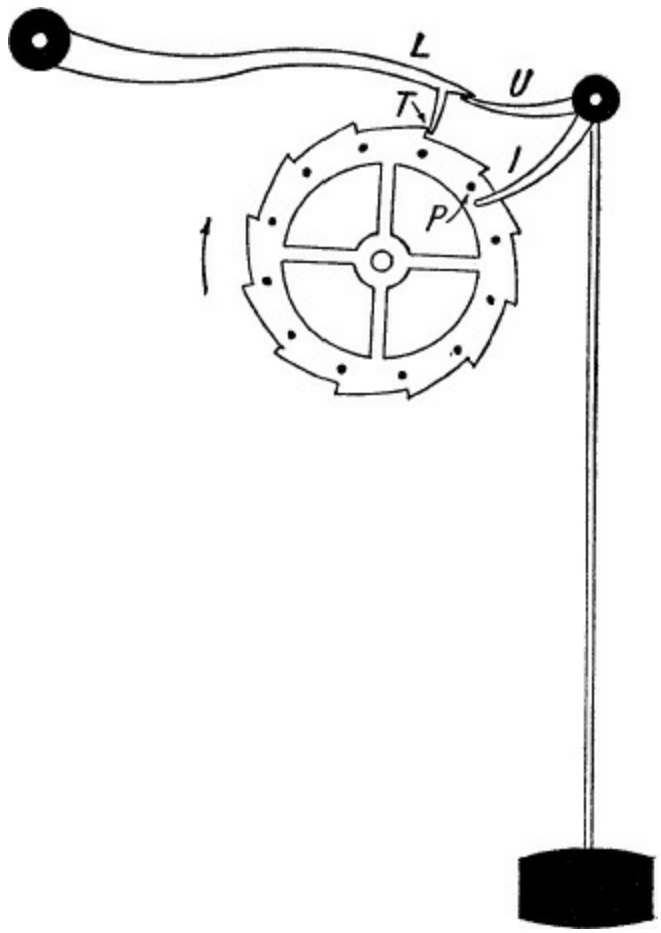

Figure 13. Galilei's escapement.

The chronometer escapement comprises the same mechanical principle as does this escapement by Galilei. It is a fact worth noting that the chronometer escapement, perfected 140 years later, is the most perfect timekeeping device that has ever been conceived. And yet, oddly enough, Galilei's escapement was not divulged to the world, and the escapements that were eventually developed proceeded upon wholly different lines.

Verge Escapement

The first mechanical clocks — that is, those consisting of toothed wheels driven by a weight —date from the tenth century. The earliest escapement that attained any prominence was the verge. The inventor is unknown, although the name of Pope Sylvester II (950-1010?) has been mentioned.

Construction. The time counter for the earliest verge clocks was a

horizontal bar called the *foliot* (Figure 14). It is a sort of balance upon which two weights are suspended from notches near each end. The weights can be moved toward or away from the center of the foliot for the purpose of regulating. The arbor for the foliot is secured to a cord at the top and a pivot at the bottom runs in a hole in the block *A*. The lower portion of the arbor carries two flattened steel pallets. The pallets and the arbor together are called the *verge*. The angle between the pallets is usually 90 to 100 degrees. In some cases, particularly those made in France, the angle is even greater, often as much as 115 degrees. These of the latter type must have the pallets planted much closer to the wheel, resulting in a longer vibration but less recoil.

The escape wheel must have an odd number of teeth in order to work at all. The usual number is 13 or 15 for watches and 21, 31, or 33 for large clocks.

Action of the escapement. In the illustration, the escape wheel is shown turning in the direction of the arrow. The tooth under pallet *B* is in the act of giving impulse. Pushing pallet *B* to the left, the tooth eventually escapes, permitting the escape wheel to turn until another tooth engages pallet *C*. After a recoil due to the inertia of the foliot, the tooth delivers impulse to pallet *C*, this time pushing the pallet to the right. Soon a tooth escapes and action is repeated when another tooth engages pallet *B*.

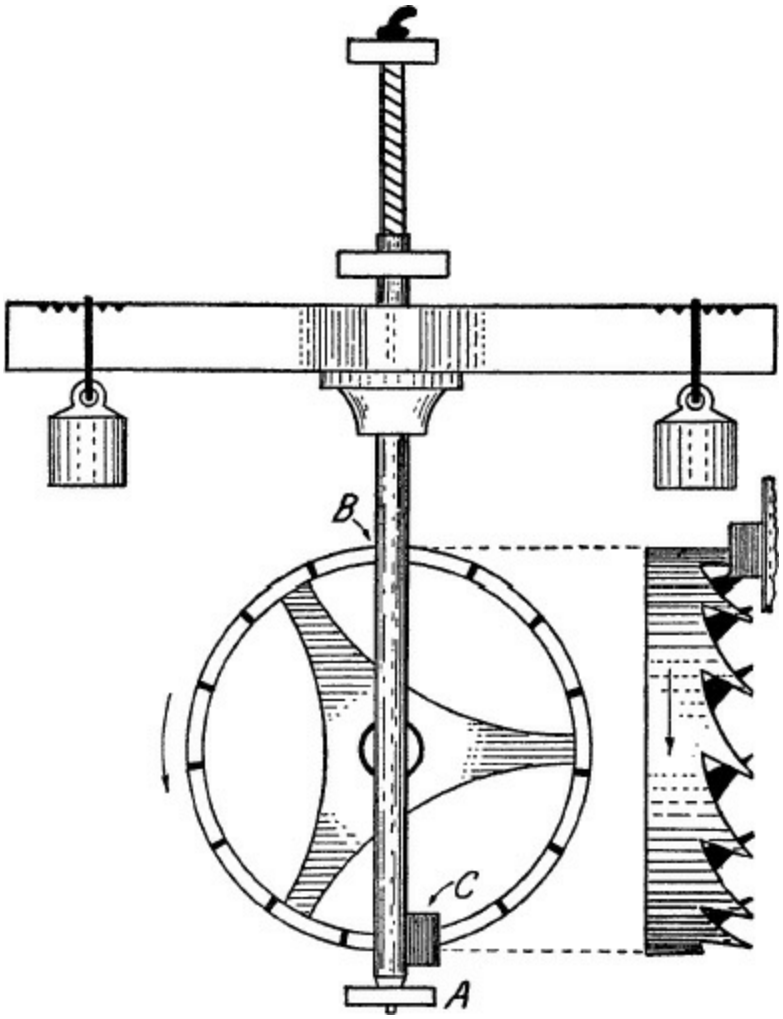

Figure 14. Verge escapement.

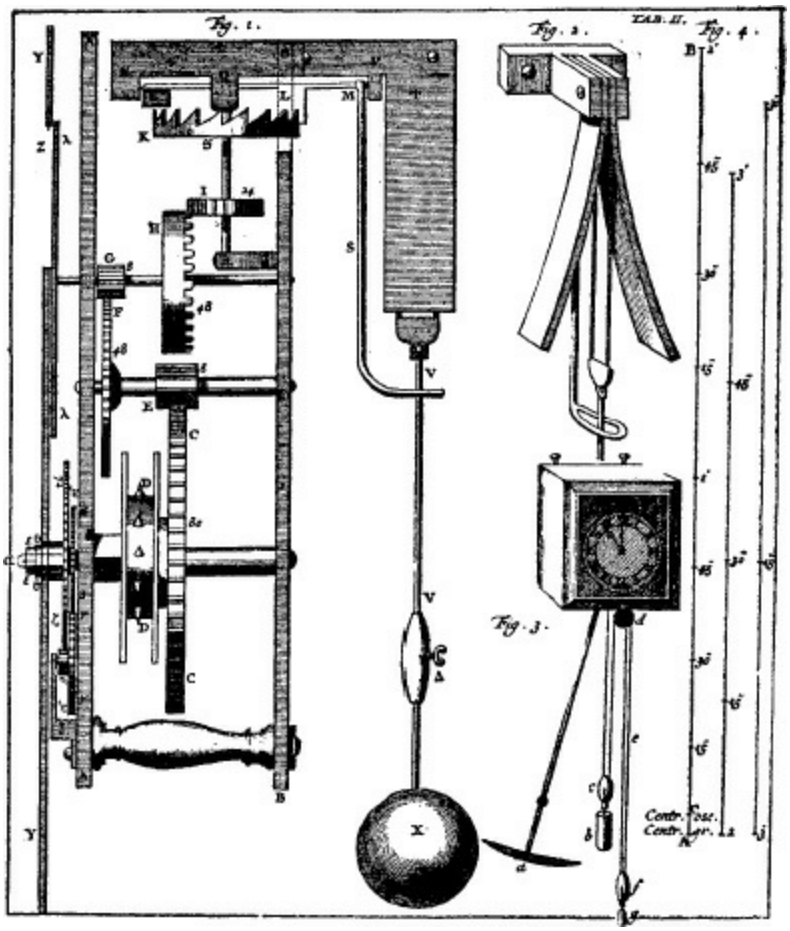

Figure 15. Huyghen's clock from Horologium Oscillatorium. Published in Paris in 1658.

Verge escapement with pendulum. Christian Huyghens adopted the pendulum to the verge escapement (Figure 15) about the year 1657. This was considered quite an achievement in its day, since the pendulum rates more consistently than the verge with foliot balance. More is said about Huyghens' clock on page 240, where an analysis of the circular error is treated in detail.

Recoil Escapement

The *recoil escapement,* shown in Figure 16, was invented by Dr. Robert Hooke in 1675. It is sometimes referred to as the *anchor* escapement.

Construction. The construction is simple. The escape wheel is of brass and the number of teeth vary greatly, depending on the type of clock and the length of the pendulum. The pallets are made of steel, hardened and highly polished.

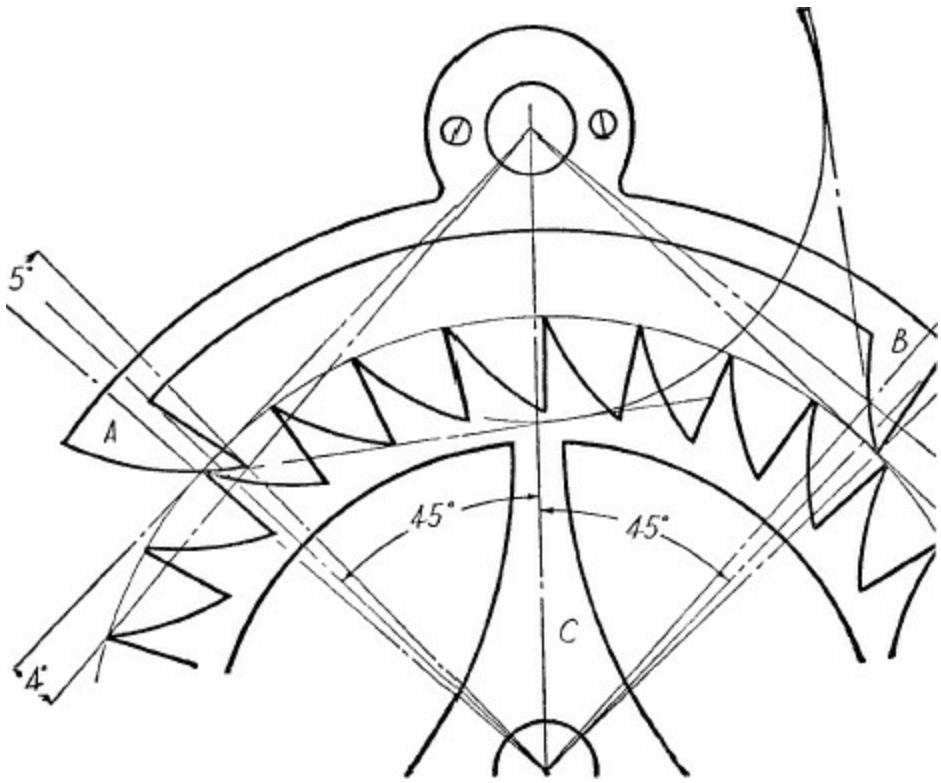

Figure 16. Recoil escapement

Action of the escapement. As the pendulum swings to the left, carrying with it the pallets, a tooth of the escape wheel drops from the receiving pallet *A*, Figure 16. The wheel is now free to turn but its motion is immediately arrested because of contact of a tooth with the discharging pallet *B.* After the pendulum completes its outward swing and returns to the right, it receives a fresh impulse through the escape wheel *C* and the discharging pallet. Eventually the discharging pallet releases the tooth and another tooth engages the receiving pallet. Thus the action continues as long as the proper motive power is held.

The recoil escapement gets its name from the fact that the escape wheel recoils or reverses its direction immediately after a tooth drops on a pallet. This action takes place because the pallets have no locking faces. Hence a tooth falls directly on the curved impulse face and, as the pendulum continues to swing outward, the curved pallet pushes the tooth back until the pendulum completes a vibration and starts in the reverse direction. The actual impulse to the pendulum is found by subtracting the recoil from the forward motion of the escape wheel.

Escapement error. It is said that the recoil escapement maintains a more uniform pendulum arc than the dead-beat (Figure 17) because the power delivered to the escape wheel tends to reduce the recoil in its effort to begin a new impulse. Such action limits the free vibration of the pendulum and an escapement error of great magnitude is produced, resulting in a loss for the short arcs. Very accurate time, however, may be realized in grandfather clocks powered by a weight for, in this case, the power at the escape wheel is reasonably constant.

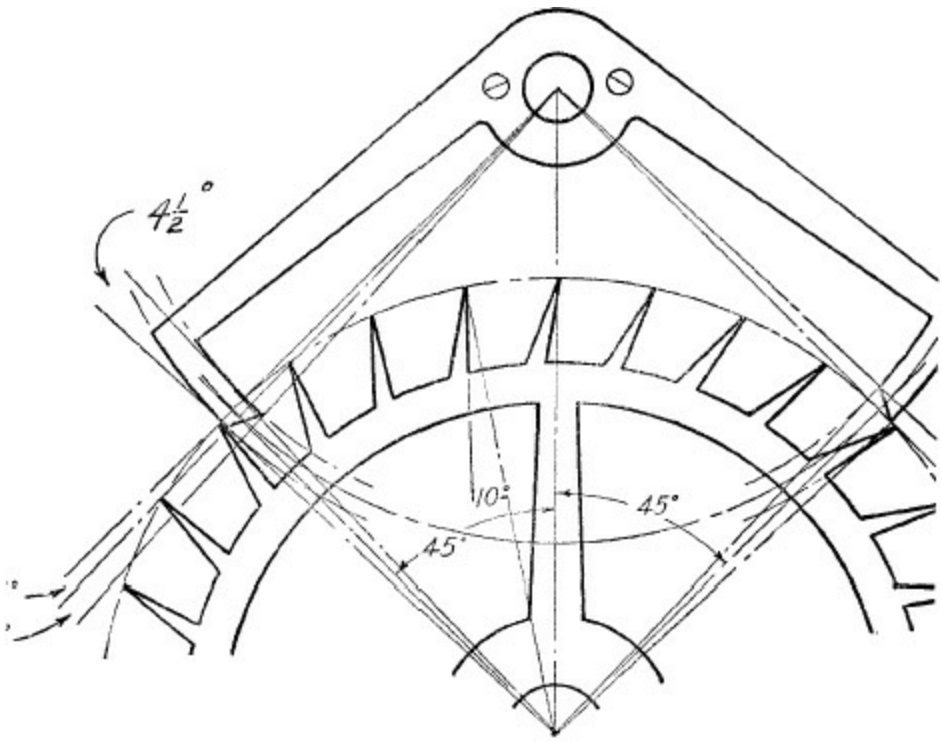

Figure 17. Dead-beat escapement.

Dead-beat Escapement

George Graham invented the dead-beat escapement in 1715. It is still regarded as one of the best escapements for high-grade regulators, grandfather clocks and others of the better quality. Except by comparison with the finest precision clocks, it leaves little to be desired. The only defect lies in a slight tendency to change the rate of running after the oil has thickened or deteriorated.

Construction. The original Graham escapement was so designed that the

pallets embraced fifteen teeth. In the more modern design, Figure 17, the pallets span eight teeth, although a design spanning ten teeth, Figure 18, has been used for large clocks and astronomical regulators. When the lesser number of teeth are embraced, the length and angle of the impulse faces are reduced and likewise the run on the locking faces. These factors become clear when comparing Figure 17 and Figure 18.

Escapement error. If the impulse of the Graham escapement could be delivered to the pendulum an equal distance before and after the dead point, the time of swing would not be altered and there would be no escapement error. This cannot be realized in practice, although the Graham escapement approaches this ideal condition quite closely. There is about half a degree impulse before the dead point and one degree after. The analysis on page 237 shows that impulse delivered after the pendulum reaches the dead point results in a loss, but actually the Graham escapement shows a gain when the pendulum arcs become shorter. It may be reasoned that the friction along the locking faces account for this unusual phenomena, for, with less power on the train, the pendulum vibrates with greater freedom and is to some extent more detached. Since it is known that the impulse error is small, the disturbing factor is more likely the circular error, which, in itself, shows a gain for the short arcs.

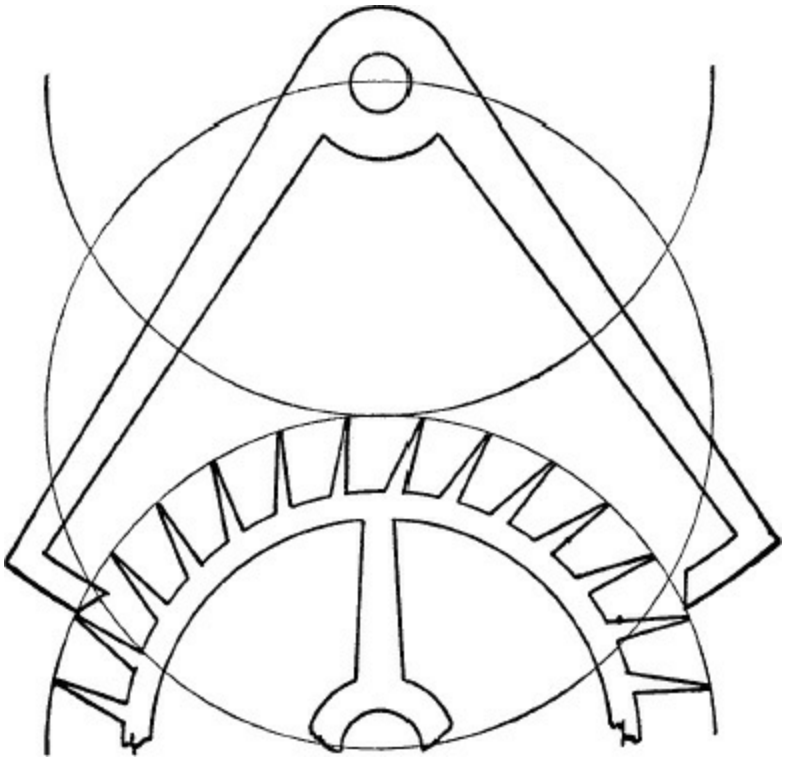

Figure 18.

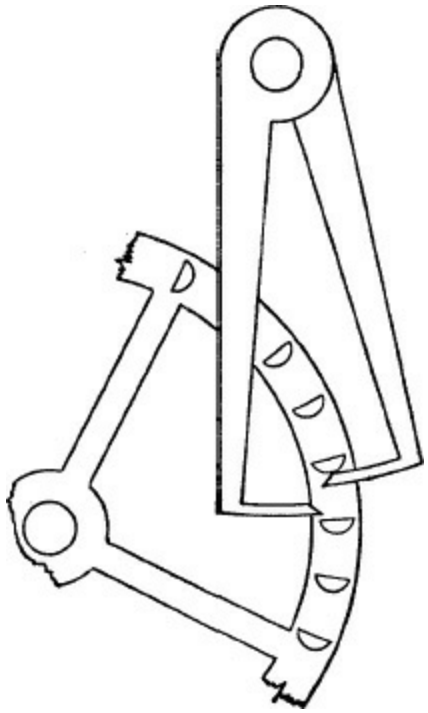

Figure 19. Pin-wheel escapement.

Pin-Wheel Escapement

Except for turret clocks, the pin-wheel escapement may be regarded as obsolete. It was invented by J. A. Lepaute in 1750.

Construction. Figure 19 shows the pin-wheel escapement. Semicircle pins stand out from the face of the escape wheel and engage the pallets on one side only, so that the pressure is always downward. The impulse is divided between the pins and pallets, and, when one pin lets off a pallet, the bottom of the oncoming pin must lock securely on the opposite pallet. The amount of lock is determined by spreading or closing the pallet arms.

When a pin is locked between the pallets, inside drop is determined. When both pallets stand between two pins, outside drop may be observed. The pin-wheel escapement has the advantage of reducing the drop to the minimum. Also the pallet arms may be made to any reasonable length without increasing or decreasing the drop —a feature that is found in no other escapement.

Pin-Pallet Escapement

This escapement was invented by Achille Brocot (1817-1878) of Paris. It is now obsolete but may still be found in the older American and French mantel clocks, particularly those enclosed in glass or marble cases. The escapement often operates visibly in front of the dial, presenting an attractive appearance.

Construction. The pin-pallet escapement has much in common with the Graham. It is found in both recoil and dead-beat types. Proportions vary, but the usual diameter of the pallets is a little less than the distance between two consecutive teeth of the wheel. With the pallets embracing ten teeth, the impulse is three degrees, as shown in Figure 20. The pallets are usually carnelian, semicircular in form, and held in place with shellac.

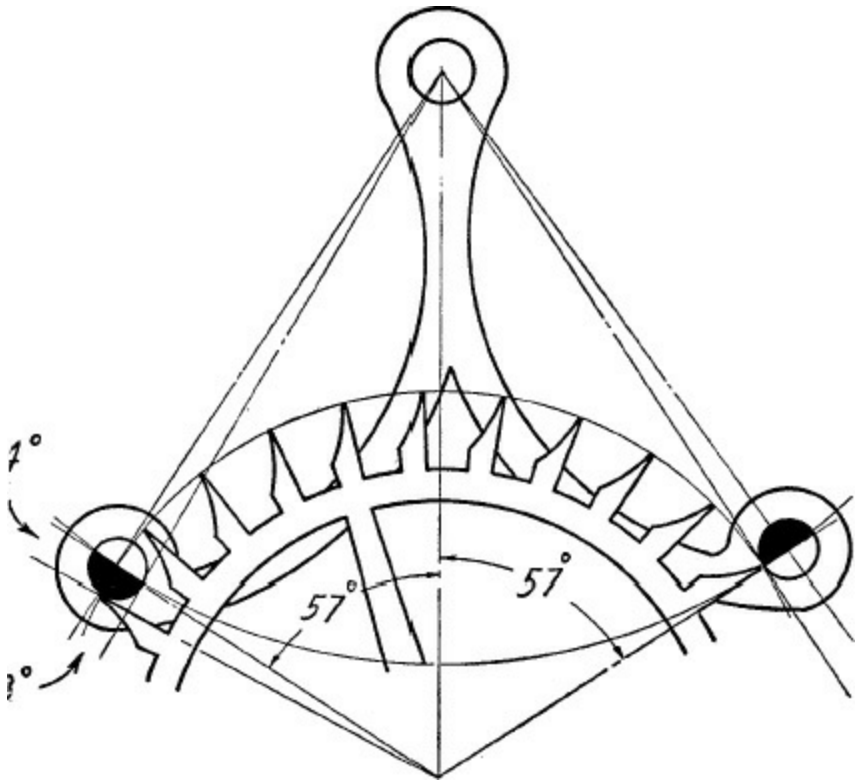

Figure 20. Pin-pallet escapement.

Denison's Gravity Escapement

The gravity escapement by E. B. Denison was originally designed for the House of Parliament clock in London in 1854, and perhaps no other tower

clock has earned a better reputation for accurate timekeeping. The fine performance must be ascribed to the Denison escapement for, when thoroughly studied, two very important points become manifest.

(1) The impulse to the pendulum is entirely free of the train disturbances such as variations in the motive power.

(2) The impulse starts at the time when the pendulum completes its outward swing and continues during the inward swing, until the line of centers is reached. This has a quickening effect on the pendulum and tends to compensate for the circular error.

Construction. Figure 21 shows the Denison escapement. Two gravity *impulse arms A* and *A′* are pivoted as nearly as possible to the bending point of the pendulum spring. The escape wheel *W* consists of two thin metal pieces of three legs each, separated by three pins, called *lifting pins.* The impulse arms *A* and *A′* lie midway between the two metal pieces. The light, three-legged piece stands in front of the impulse arms and the shaded piece behind the arms. Attached to the impulse arms are the blocks *B* and *B′*, upon which the legs of the escape wheel lock. Block *B′* is secured on the front of the arm *A′* and block *B* on the back of arm *A*. Extending toward the lifting pins L and *U* from the impulse arms are the lifting pallets *P* and *P′*.

Action of the Denison escapement. A leg of the escape wheel is locked on block *B′*, overlapping it by ½ degree. The position of the impulse arm *A′* and the amount of locking on *B′* is controlled by the lifting pin *L* acting on the lifting pallet *P′*.

The pendulum, now moving to the right, soon engages the lower extremity of the impulse arm *A′* and, pushing it, releases the leg that is locked on block *B′*. The escape wheel starts to rotate and the lifting pin *L* separates from the lifting pallet *P’*, leaving the impulse arm *A’* free to press on the pendulum rod, thereby being ready to give impulse to the pendulum on its return vibration. At the same instant, while the wheel is rotating, lifting pin *U* engages the lifting pallet *P*, pushing the impulse arm *A* outward so that the on-coming leg of the escape wheel locks on the block *B* overlapping it ½ degree. Thus the impulse arm *A* is pushed back in advance of the pendulum.

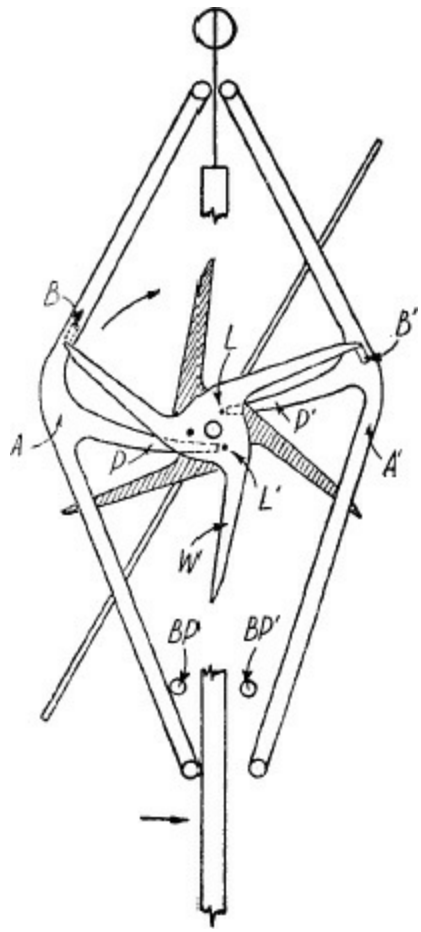

Figure 21. Denison's gravity escapement.

The pendulum, having completed its vibration to the right, receives impulse from the impulse arm *A'*, which falls with the pendulum to the left until banking pin *BP'* is reached. The pendulum continues to swing to the left for a performance similar to the one just completed on the right.

Reifer Escapement

Horologists have for many years observed the detrimental effects of the escapement on the uniform rate of pendulum vibrations. In the recoil and dead-beat escapements, any variation in the motive power is carried directly to the pendulum, resulting in noticeable variation in time. The gravity escapement shows a constantly uniform impulse, but the locking is variable, depending on the power transmitted through the train.

In 1891 Dr. Siegmund Reifer of Munich produced a clock with a free pendulum — that is, an escapement without the conventional crutch. Instead

of a crutch, the impulse is produced by deflecting the pendulum spring.

Construction. Figure 22 shows the principle on which the escapement is based but without all the constructional details.

There are two escape wheels. One is for the impulse and the other for the locking. The impulse wheel acts on cylindrical pallets for the impulse and, when the impulse is completed, the locking wheel follows immediately to lock the pallets. The outer ends of the pallets are flattened to provide a suitable locking surface for the locking wheel.

Action of the escapement. The receiving pallet is locked on the locking wheel and starts the pendulum swinging to the left. After the pendulum, together with the pallets, has traveled a sufficient distance, the receiving pallet unlocks, permitting the escape wheels to rotate. Instantly the discharging pallet receives an impulse followed by a tooth locking — an order completely reversed if compared with the Graham dead-beat escapement. This action deflects the pendulum spring, which, by the resistance it offers to bending, gives impulse to the pendulum. Observe that this happens before the pendulum has yet completed its swing to the left. The outward swing of the pendulum is thus restricted and, when the arc is completed, the tension on the pendulum spring is sufficient to keep the pendulum vibrating.

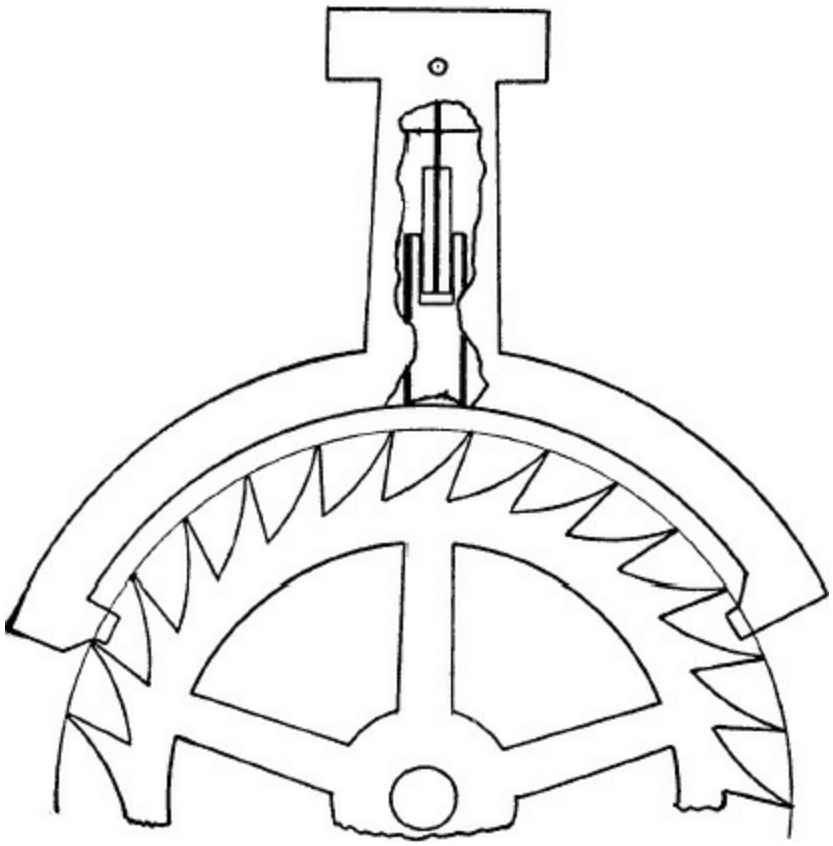

Figure 22. Reifer escapement.

Escapement error. As with the gravity escapement, the impulse has an accelerating effect; the greater the arc the greater is the acceleration. However, the escapement error is directly opposite to the circular error and one tends to compensate for the other, although not perfectly. It can be shown that the escapement error is greater.

It may be reasoned that the good going of a Reifer clock is attributed to the small arc of vibration of the pendulum and the uniform motive power which consists of an automatic electrical winding device.

Leroy Escapement

One of the more recent precision escapements is that developed by *Leroy et Cie*, of Paris, as shown in Figure 23. In principle, the operation is similar to the Reifer escapement, but has the advantage of a greater detachment of the pendulum from the escapement.

Construction. The impulse is delivered to the pendulum through the

medium of two springs that are secured directly to the pendulum rod. These springs, called *impulse springs,* meet at a point where the pallets are pivoted, giving it the appearance of a Y. The two ends *A* and *B* carry sapphire pallets that terminate into projections called *locking nibs.* The inclined portions provide impulse to the pendulum and the locking nibs lock the escape wheel.

Also secured to the pendulum is the frame *C,* which supports two adjustable stops *D* and *E*. These stops limit the inward movement of the impulse springs.

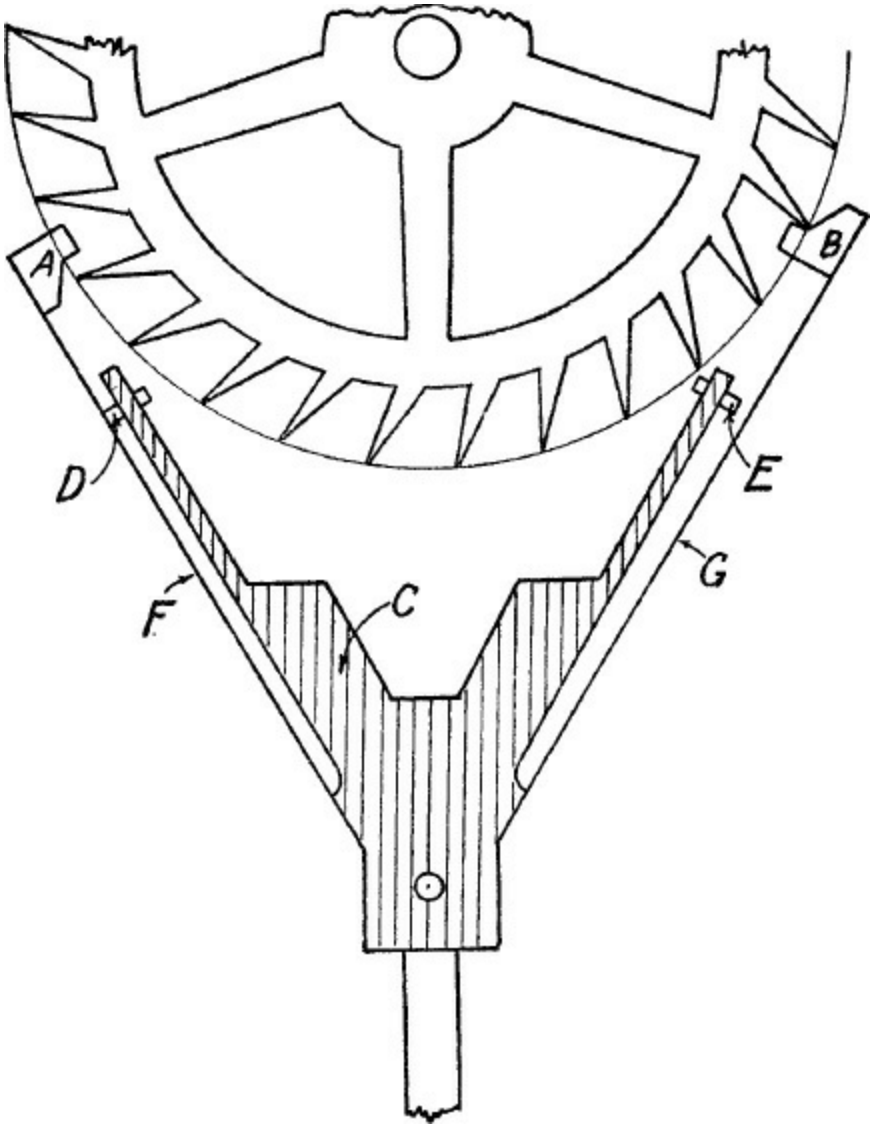

Figure 23. Leroy escapement.

Action of the escapement. The pendulum has just completed its swing to

the right and one tooth of the escape wheel has already moved along the impulse face of the receiving pallet and is locked on the locking nib. The above action of impulse and locking bends the impulse spring *G*, separating it from the stop *E*. By reason of the tension of the spring, the pendulum is now driven to the left, while the frame C, since it lies above the center of suspension, moves to the right. The pendulum continues to swing, and eventually stop *E* overtakes the impulse spring *G* and, pushing it, unlocks the escape wheel. Immediately the wheel turns and another tooth lifts the discharging pallet *A*, incidentally bending the impulse spring *F*. This action retards the pendulum near the completion of its outward swing. When the vibration is completed, the pendulum returns to the right, since the spring is still under tension, to repeat the action on the receiving pallet.

Change of temperature would vary the elasticity of the impulse springs; however, precision clocks are usually placed in special chambers where the temperature remains constant. Some Leroy clocks are fitted with elinvar springs in place of steel springs to eliminate the temperature factor.

The Leroy clock is unique in that it contains only two wheels and indicates seconds only. The clock winds electrically every thirty seconds and is operated by a four-volt battery or equivalent.

PART II

Chapter Five

ESCAPEMENTS FOR BALANCE WHEEL TIMEPIECES

THE ESCAPEMENTS described in Chapter Four use the pendulum as the time counter. Portable clocks, chronometers, and watches require a balance and balance spring as the time counter and must of necessity use a different type of escapement. We shall consider in this chapter four escapements that have been used in balance-wheel timekeepers. These are: the lever, cylinder, duplex, and chronometer.

Lever Escapement

The lever escapement was invented by Thomas Mudge (1715-1794) in 1750. It differs from the cylinder and duplex escapements in that the lever is free of the balance for a greater part of the vibration. Theoretically the lever escapement approaches the ideal; its performance is excellent and it is as simple as any to construct. The escapement as conceived by Mudge differs materially from the modern form, and because of its historical interest we shall include in this chapter a brief description of it. Two other early types of special interest shall also be considered. These are: the rack lever and the ratchet tooth escapement.

The modern lever escapement is found in two types: (1) the pin pallet, used in alarm clocks, novelty clocks, and watches of extremely low cost, and (2) the club tooth, used in clocks and watches of the better quality.

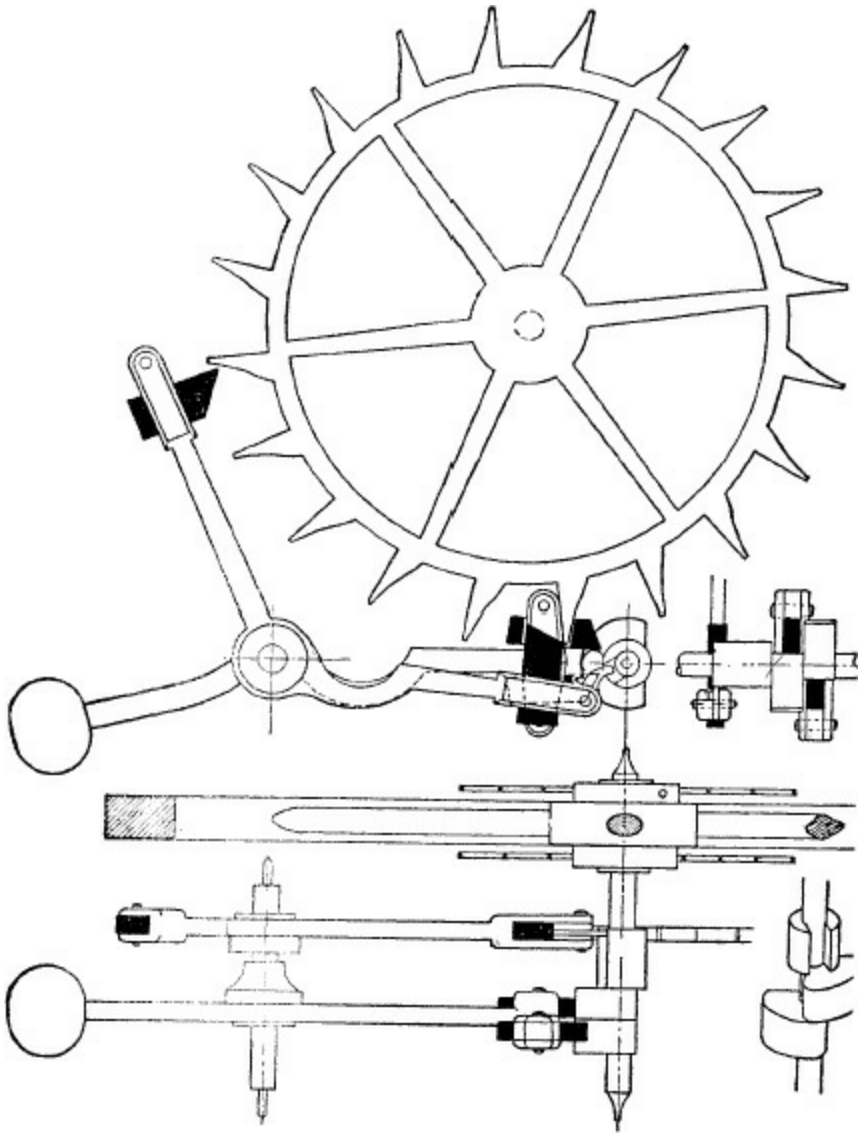

Figure 24. Lever escapement by Thomas Mudge. From Chamberlin's *It's About Time* and used by permission of Richard R. Smith.

LEVER ESCAPEMENT BY MUDGE

It appears that Mudge was not convinced that his escapement was anything very special, for he applied it to only two of his watches. Other watchmakers, too, did not realize its merit and it was some fifty years before it was generally accepted as the ultimate in watch escapements.

Figure 24 shows the plan of the original. The wheel contains twenty teeth, and the pallets embrace five teeth. The pallets' locking faces are arcs of circles concentric to the pallet center. The teeth are pointed, and this feature has been traditional with the English to comparatively recent times.

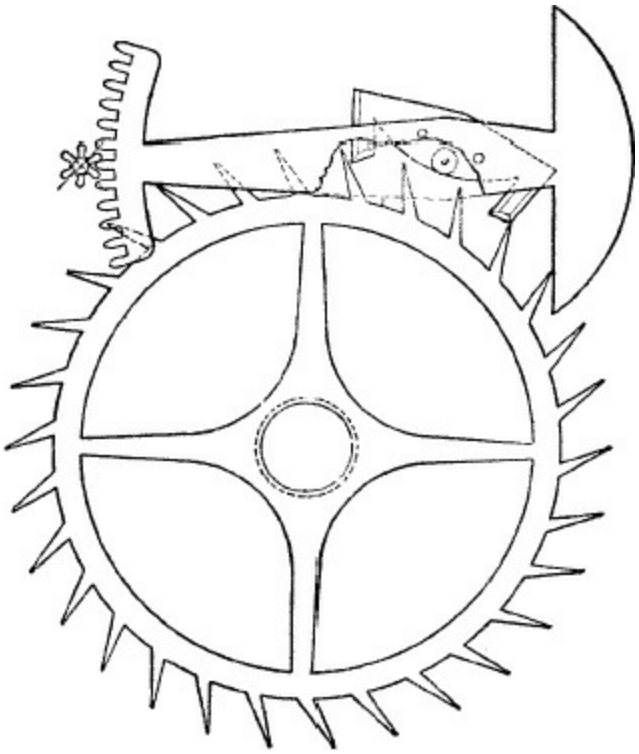

Figure 25. Rack lever escapement. From Chamberlin's *It's About Time* and used by permission of Richard R. Smith.

The forked end of the lever is different from the modern form. The two prongs of the fork lie in different planes. Two impulse pieces on the balance staff, in line with the two prongs of the fork, perform the unlocking and impulse actions. The safety action is effected by a small disk of steel with a shallow notch similar to the modern double-roller escapement.

RACK LEVER ESCAPEMENT

The oldest method of transferring the impulse of the lever to the balance is the rack lever (Figure 25). The balance staff has a pinion which gears into a toothed rack. The balance is never free of the escapement. There is no necessity for any safety action, no need for banking pins, and there is very little friction or resistance in the act of unlocking. The inventor was Abbe Hautefeuille, who published a description of it in 1722.

RATCHET-TOOTH ESCAPEMENT

The English ratchet-tooth escapement places the entire lifting action on the pallet, as shown in Figure 26. It is claimed that there is less friction as

compared with the club-tooth type because of the pointed teeth sliding along the polished pallet jewels. The drop is considerable, however, and results in a loss of power which no doubt accounts for the fact that watches fitted with a ratchet-toothed wheel require a strong mainspring.

Most ratchet-tooth escapements use the single roller for the safety action as shown in the illustration.

PIN-PALLET — TERMINOLOGY AND CONSTRUCTION

The escape wheel of the pin-pallet variety is made either of brass or steel and usually contains 15 teeth. The teeth are so shaped as to provide a lifting or pushing effect on the pins *R* and *D* (Figure 27). Since the teeth perform more than one function, it is necessary to use additional terms in describing the escapement action. The slanting face on which the pallets lock is the *locking face;* the lifting plane is the *impulse face;* the intersection of the locking face and the impulse face is the *toe;* and the intersection of the impulse face and the letting-off corner is the *heel.* The locking face has an additional function of keeping the lever to the banking pins. The force, called *draw,* exists because the locking face slants to the left. The metal piece that carries the pins is called the *pallet frame.* Attached to the pallet frame is the lever *L.* At the extremity of the lever is the fork, which is divided into two parts: the slot and the horns. The illustration does not show the fork, but it is usually constructed similar to that shown in Figure 28.

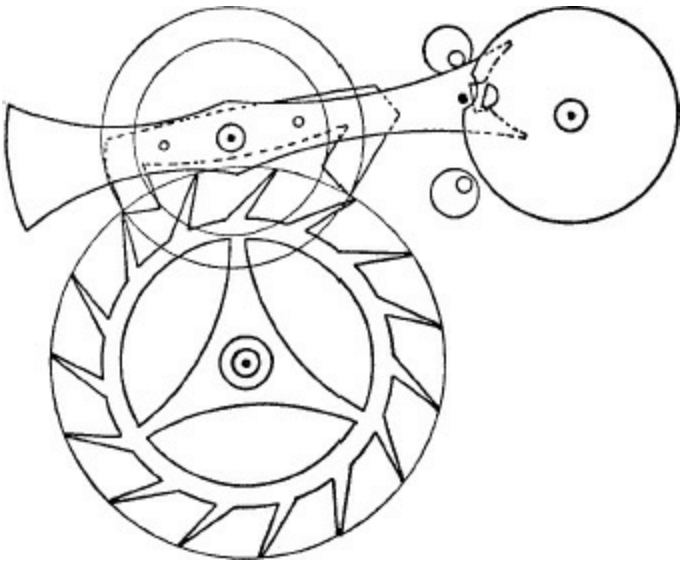

Figure 26. Ratchet tooth escapement.

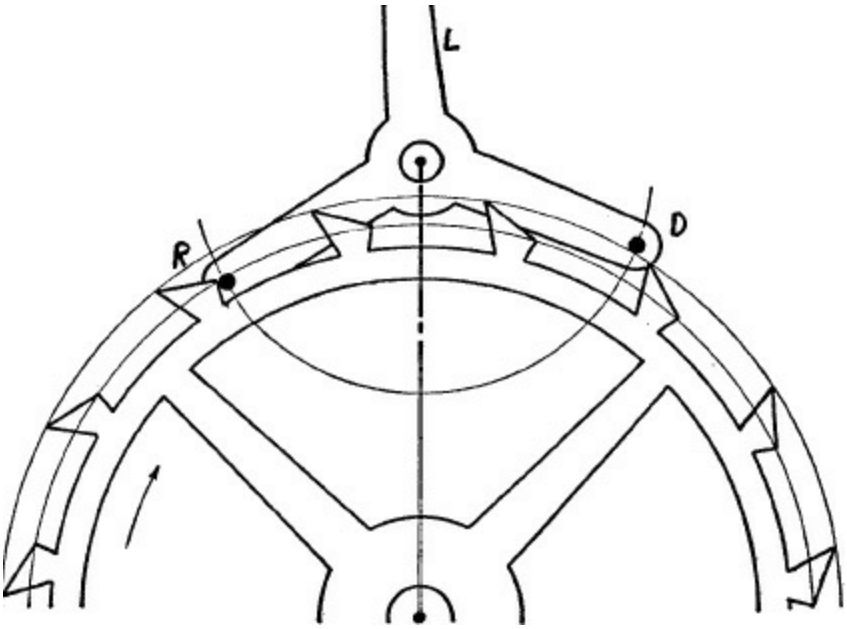

Figure 27. Pin pallet escapement.

The balance carries a small steel pin, flattened on one side, called the *impulse pin.* Through its engagement with the fork slot, the balance is kept in motion.

A portion of the staff is milled out to permit the guard finger to pass in and out during the impulse. This feature prevents the lever from going across at the wrong time, as the guard finger would butt against the circular portion of the staff should a jar take place.

CLUB-TOOTH — TERMINOLOGY AND CONSTRUCTION

The escape wheel is of brass or steel and usually has fifteen teeth which act alternately on the pallets *R* and *D* (Figure 28). The pallets of ruby or sapphire are cemented in slots in the pallet frame. Impulse is divided between tooth and pallet as shown in the illustration. The pallet jewels are divided into three parts or functions: locking face, impulse face, and letting-off corner. The locking faces of the pallets are tilted to an angle of 12 degrees from the lines *AB* and *A'B'* in order to produce the necessary draw. This differs from the pin-pallet, in which case the locking faces of the teeth provide the draw. Attached to the pallet frame is the lever L, to which it attached the fork and guard finger.

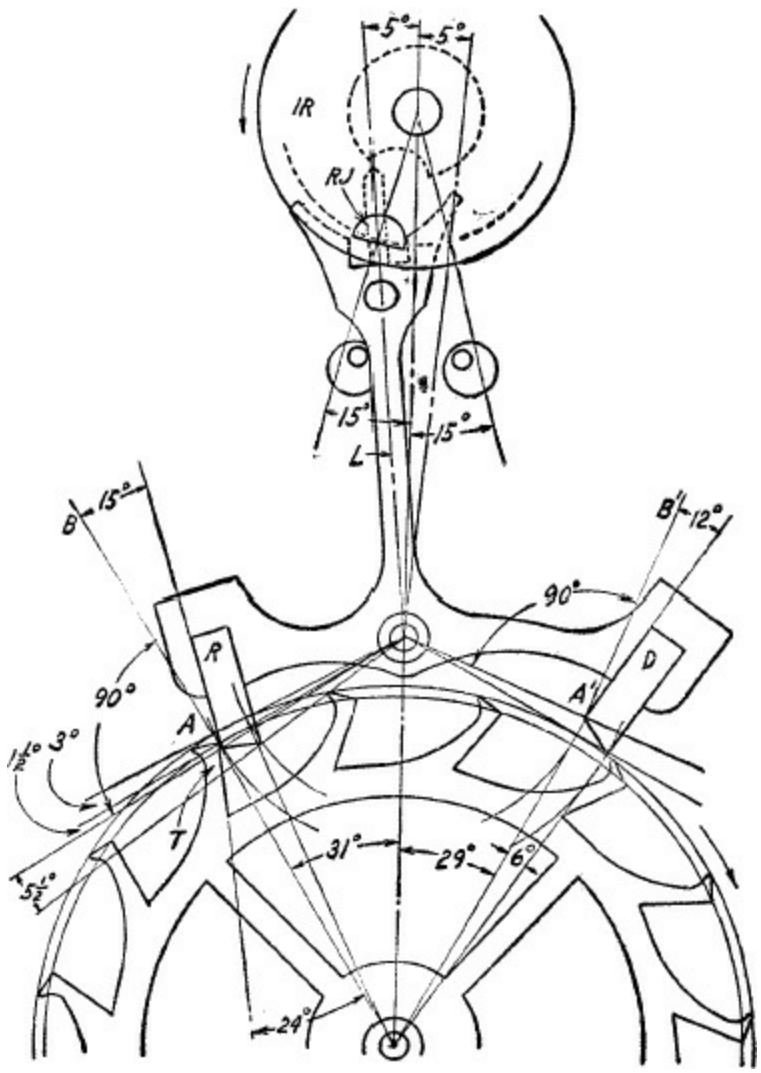

Figure 28. Lever escapement.

In contrast to the pin-pallet escapement, the club-tooth type has a jewel for the impulse pin usually called *roller jewel.* A disk called the *impulse roller* is fitted to the lower part of the balance staff and this piece carries the roller jewel. Also fitted to the staff and lying below the impulse roller is a smaller disk called the *safety roller. A* crescent or circular notch is cut out of the edge of the safety roller to permit the guard finger to pass in and out during the impulse. Most modern lever escapements use the above type of safety action and are called *double roller escapements.*

ACTION OF THE LEVER ESCAPEMENT

The several variations of the lever escapement described above have the

same mechanical action. Thus the explanation to follow applies equally to all forms.

Figure 28 shows the receiving pallet *R* locked on the tooth of the escape wheel. The balance is rotating in the direction of the arrow, carrying with it the impulse roller *IR*. The roller jewel *RJ* advances toward the fork slot and moves the lever to the right. This action causes the receiving pallet to recede from the tooth until the unlocking takes place. Immediately after unlocking, the escape wheel turns clockwise and the tooth *T*, through contact with the impulse face of the receiving pallet, drives the lever to the right, and the fork slot carries the impulse to the roller jewel. The force is sufficient to turn the balance with considerable velocity, unwinding the balance spring (in some cases winding it up) until the force is exhausted. In the meantime, tooth *T* has dropped off the receiving pallet and another tooth has locked on the discharging pallet. The inertia of the balance having become exhausted, the balance spring takes over and starts the balance on its return vibration. When the roller jewel reaches the fork slot, the discharging pallet unlocks a tooth and a new impulse begins, this time driving the balance in a clockwise direction.

Beat. The lever escapement is in *beat* when the balance spring is so adjusted as to permit the roller jewel to point toward the pallet center. In practice the balance may be turned an equal distance on either side of the line of centers and the watch should start. If it starts on one side and sets on the other, the escapement is *out of beat.* If the escapement sets on both sides, as is possible in some small wrist watches, the escapement is considered *in beat.*

Oiling the escapement. Oil every other tooth of the escape wheel. This is sufficient to spread the oil to the pallets after the watch is running. The roller jewel is *not* oiled.

Escapement error. Figure 28 shows that the lever moves 10 degrees from banking to banking; 5 degrees on each side of the line of centers. The unlocking action takes up 1½ degrees, which must be subtracted from the 5 degrees of angular motion to the center line. Thus the impulse which follows from unlocking to the line of centers makes good the loss by only a slight margin. The real impulse occurs slightly before the line of centers is reached and consists of about 18 degrees at the radius of the roller jewel. This, according to the analysis given on page 237, results in a loss for the short arcs.

Cylinder Escapement

Thomas Tompion (1638-1713) invented the cylinder escapement about the year 1695. George Graham, famous for the dead-beat clock escapement, improved it and gave it its modern form some twenty-five years later. It appears that the English experienced constructional difficulties which the Swiss solved by making both the cylinder and the escape wheel of hardened steel. The result was that the cylinder became popular in France and Switzerland, where men learned to make it cheaply. The escapement, though now obsolete, is still met with in repair work.

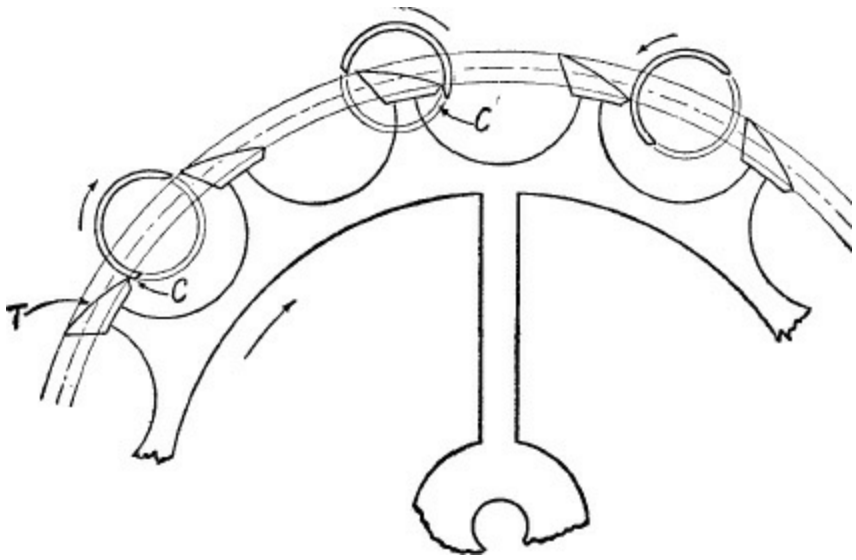

Figure 29. Cylinder escapement.

Construction. A hollow steel tube (the cylinder C, Figure 29) has nearly half of its circumference cut away to permit the teeth of the escape wheel to enter. The balance is attached to the cylinder, and plugs, on which pivots are formed, are forced friction tight in each end of the cylinder. The rim of the balance is fitted with a small pin which, by contacting another pin under the balance bridge, limits the length of a vibration to a half turn only. This is necessary in the cylinder escapement, for it can readily be seen that the balance cannot turn more than a half turn in one direction without putting the escapement out of action. It is further evident that the escape wheel teeth must be mounted on the ends of vertical posts projecting upwards from the wheel itself. This is necessary so that the cylinder may rotate around a tooth during a vibration. For the same reason, the lower part of the cylinder is cut

away to a greater extent to provide for a full vibration.

Action of the escapement. The balance is turning in the direction of the arrow. The cylinder, on which tooth *T* is locked, turns accordingly, permitting a tooth to pass inside the cylinder. The impulse is given by the inclined face of the tooth *T* acting upon the corner *C* of the cylinder. Impulse completed, the point of the tooth drops on the inner surface of the cylinder and remains in contact during the remainder of the vibration. Upon the return vibration, the same tooth is freed and another impulse takes place, this time on the corner *C′* of the cylinder. Again, when the impulse is completed, another tooth drops on the outside wall of the cylinder ready to perform a new impulse as soon as the balance has completed its vibration.

Beat. The cylinder escapement is *in beat* when the corners *C* and *C* lie at an equal distance to the escape wheel center when the balance spring is at rest. In this position the cylinder is always receiving impulse and should start when the mainspring is wound a few turns. If, by turning the balance an equal distance on either side of its point of rest, we find that it sets on one side and starts on the opposite side, we may assume that the escapement is *out of beat.*

Oiling the Escapement. Oil the impulse face of every other tooth of the escape wheel. This is all the oiling necessary, as the contact of the teeth with the cylinder will spread the oil to the remaining teeth.

Escapement error. The varied tension of the mainspring as the timepiece runs down has less effect on the motion of the balance in the cylinder escapement as compared with the lever escapement. This may be explained if we consider the friction of the points of the teeth on the cylinder wall. This friction is considerable when the motive power is increased and just about equals the increase in impulse. In this way any isochronal error of the balance spring becomes less evident.

The impulse is practically equal on both sides of the line of centers, and this, too, would suggest that the cylinder escapement should maintain a constant rate. However, in spite of these good points, the chief fault of the cylinder lies in the fact that the balance is never free of the escapement and difficulties develop when the cylinder becomes worn.

Duplex Escapement

The duplex escapement appears to embody excellent principles of design but, because of constructional difficulties, has never achieved popularity. It was invented by a French watchmaker, J. B. Dutertre, in 1724. The English used the duplex more generally than the watchmakers on the continent and some very fine specimens were made with ruby rollers. With the introduction of the lever escapement, the duplex declined and is no longer made.

Construction. The escape wheel, Figure 30, consists of two sets of teeth. The longer teeth are called the *locking teeth* and the shorter teeth that lie within and above the locking teeth are called the *impulse teeth.* The locking teeth rest on the roller during the balance vibration until such time when the impulse takes place. Impulse is made possible when one of the locking teeth drops into the notch in the roller. When this happens, the impulse teeth engage the impulse pallet *IP* to perform the impulse, which takes place in one direction only. On the return vibration, the impulse pallet must swing between two impulse teeth: It is here that the duplex has a very delicate action and must be very accurately made.

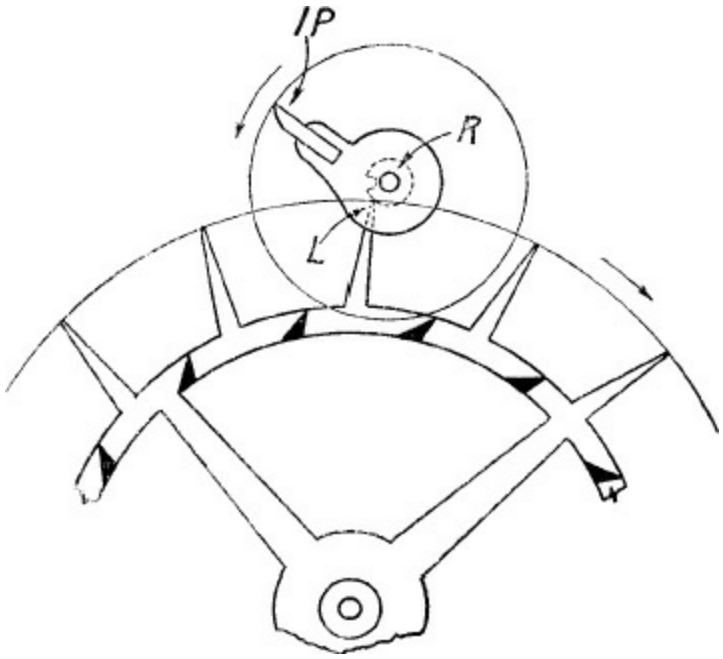

Figure 30. Duplex escapement.

Action of the escapement. The locking tooth *L* is resting on the notched roller *R* and the balance is turning in the direction of the arrow. When the notch reaches the locking tooth, the tooth will drop into it. Although the

function of the locking tooth is to lock the escape wheel, it does, incidentally, perform a small impulse to the balance when the tooth enters the notch. When the locking tooth is about to leave the notch, the impulse pallet *IP* has turned to a position ready to receive impulse from the impulse tooth. It is required that the impulse pallet advance about 8 degrees ahead of the impulse tooth for a safe action. When the locking tooth drops free of the notch, an impulse tooth engages the impulse pallet and impulse takes place. After the impulse is completed, another locking tooth engages the roller and the vibration continues and finally exhausts itself. On the return vibration, there is no impulse; the notch merely passes the locking tooth, causing a slight recoil of the escape wheel.

Beat. The duplex escapement is *in beat* when the notch lies between the line of centers and the locking tooth. The tooth is, of course, resting on the roller. *Out of beat* is a frequent cause of stoppage.

Oiling the escapement. The roller is the only part oiled. Thickened oil is detrimental to the duplex and the notch must be kept clean. To assure this, sharpen a piece of pegwood and work it up and down in the notch.

Escapement error. Being a frictional rest escapement, the variable pressure on the roller and the deterioration of the oil cause a variable rate. There is also an engaging friction before the impulse and a disengaging friction on the return vibration. The engaging friction is greater and is often the cause of setting.

Chronometer Escapement

Pierre LeRoy (1717-1785) created, in principle, an escapement upon which the modern chronometer escapement is based. Its modern form was the work of Thomas Earnshaw (1749-1829).

The escapement is so designed as to leave the balance more nearly free of escapement disturbances than any that has yet been invented. It follows, obviously, that it is the most accurate of any in the registering of time.

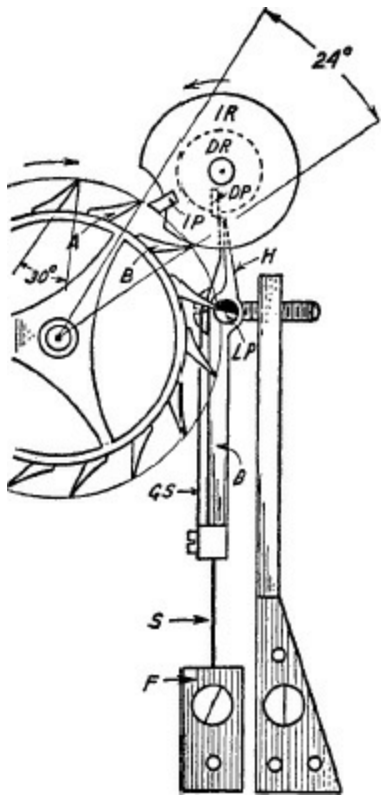

Figure 31. Chronometer escapement.

Construction. The escape wheel (Figure 31) is of brass and the arms are reduced to half the thickness of the teeth for lightness. The locking face of the teeth is inclined about 30 degrees to facilitate the draw. The diameter of the steel *impulse roller IR* is ½ that of the escape wheel and is planted between two teeth of the escape wheel. Theoretically the roller intersects a path of 24 degrees measured from the escape wheel center. Actually the circular path is less, allowing for the necessary clearance. Accordingly the balance arc is slightly less than 45 degrees.

The discharging roller DR and pallet lie below the impulse roller and engage the gold spring of the detent. The diameter is half that of the impulse roller. The size is important if the detent is to return on time to lock the oncoming tooth of the escape wheel.

The detent is a length of hardened and tempered steel whose parts are shown in the illustration and indicated as follows: *F*, the foot; *S*, the spring; *B*, the blade; and *H*, the horn. A hole is bored in the blade to receive the locking pallet *LP*. Screwed to the blade and projecting beyond the horn is the gold spring *GS*.

Action of the escapement. The balance is rotating in the direction of the arrow. Likewise the discharging pallet *DP* turns and pushes the detent to the right. This action releases the escape wheel tooth from the locking pallet *LP*. The escape wheel is now free to turn in the direction of the arrow, but its free motion is retarded when the tooth *A* engages the impulse pallet *IP*. The impulse pallet has already moved ahead of tooth A by 5 degrees, thereby securing a safe overlapping. The escape wheel tooth now drives the impulse pallet until the divergence of their paths separate them. The instant tooth *A* drops off the impulse pallet *IP*, tooth *B* engages the locking pallet. (Return of the locking pallet took place the instant the discharging pallet passed the gold spring.) The balance wheel continues its circular motion, winding up the balance spring until its energy is exhausted. On the return vibration, the discharging pallet pushes aside the gold spring without disturbing the detent. After the inertia of the balance is exhausted, the balance returns for another vibration precisely like the first.

Beat. The chronometer escapement is in beat when the discharging pallet points directly toward the gold spring. In practice the balance spring is so adjusted that the gold spring just touches the discharging pallet on the side facing the escape wheel. In this position the balance may be rotated an equal distance in either direction and the escapement will start of itself.

Oiling the escapement. The chronometer escapement requires no oil, since the unlocking and impulse actions are more in the nature of a direct push with very little sliding friction. This is an advantage, for the deterioration of the oil, as is required in other escapements, changes the rate.

Escapement error. Both the chronometer and lever escapements give most of the impulse after the line of centers which cause the short arcs to lose. This effect can be altered in the chronometer escapement by adjusting the relative positions of the unlocking and impulse pallets. This changes the amount of drop and also the length of the impulse before the line of centers.

It will be further observed that the balance spring can be so adjusted that there would be no escapement error by adjusting the spring so as to advance the impulse pallet. (This seemingly desirable feature of centering the impulse is never practiced for the reason that the escapement is more apt to set. Instead the escapement is always put in beat as already explained.)

Chronometer escapement for watches. Although the chronometer

escapement has been used in pocket watches, it is not recommended. Sudden jars are apt to cause the escapement to set. The escapement is more expensive and much more delicate than the lever and even in the chronometer, a more robust instrument than a watch, the escapement must be handled with care.

One point in particular should be noted. The balance should *not* be removed when the mainspring is under tension. Either let the mainspring down completely or lock the train by wedging a piece of cork between the fourth wheel and the plate. The reason for this precaution is that the locking pallet is apt to be broken off should the train start without the balance in the movement.

PART II

Chapter Six

STRIKING MECHANISMS

THE STRIKING mechanism of a clock consists of a separate train and power unit. It is not, in any way, connected with the timekeeping mechanism or main train, except that the main train sets the striking train in motion at the proper time.

There are two types of striking mechanisms in general use. These are the *counting-wheel* and *rack-and-snail*. The counting-wheel is the older; in fact, it is as old as the mechanical clock itself. It is still used in popular-priced American mantel clocks and in tower clocks. The rack-and-snail type was invented by Edward Barlow in 1676 and is found in mantel clocks of the better quality and in all modern hall clocks.

Counting-Wheel Mechanism

The only disadvantage of the counting-wheel type is the caution required in setting the hands to time. In advancing the minute hand, it is necessary to allow the striking to finish to the hour indicated before advancing the hands to the next half hour. In other words, the counting-wheel system strikes consecutively and is not self-correcting.

AMERICAN MANTEL CLOCK WITH COUNTING-WHEEL MECHANISM

Construction. Figure 32 shows the arrangement usually found in the American mantel clock. The cam on the center arbor is shown in a position ready to raise the lifting lever L. This lever is attached to the arbor *A*, which, in turn, carries the warning lever *W* and the unlocking lever *U*. The unlocking lever lies under and pushes the counting lever *CL* which is secured to the arbor *B*. Mounted on arbor *B* are two levers: the counting lever, mentioned

above, and the drop lever *D*. When the striking mechanism is locked, the drop lever *D* rests in the notch of the cam wheel C. Also the counting lever *CL* rests in one of the deeper slots in the counting wheel *CW*.

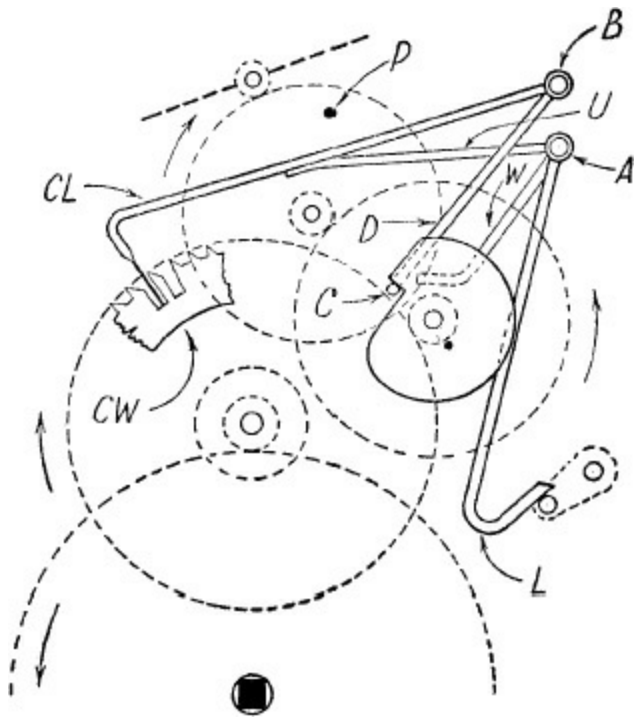

Figure 32. Counting-wheel mechanism as applied to American mantel clocks.

Action of counting-wheel mechanism. As the cam on the center arbor advances clockwise and raises the lifting lever *L*, four levers are brought into action. Warning lever *W* is raised in position to engage the pin *P* on the warning wheel. The unlocking lever *U* lifts the drop lever *D* and also the counting lever *CL*, since both levers are attached to arbor *B*. This results in a simultaneous separation of these two levers from their seats, the former from the notch in the cam wheel and the latter from the deeper slot in the counting wheel. The train is now free to tui but only for a moment, as a pin *P* on the warning when catches on the already raised warning lever *W*. Precise! on the hour, the cam passes the lifting lever *L*, permitting the lifting lever to fall. At the same moment the warning lever *W* also drops. This action releases the pin on the warning wheel and the striking begins. As the striking continues, the counting wheel turns, and the counting lever drops into and raises above the shallow slots. Finally the counting lever drops into one of the deeper slots and the drop lever, at the same moment, drop into the notch on the cam wheel. When this happens the striking stops.

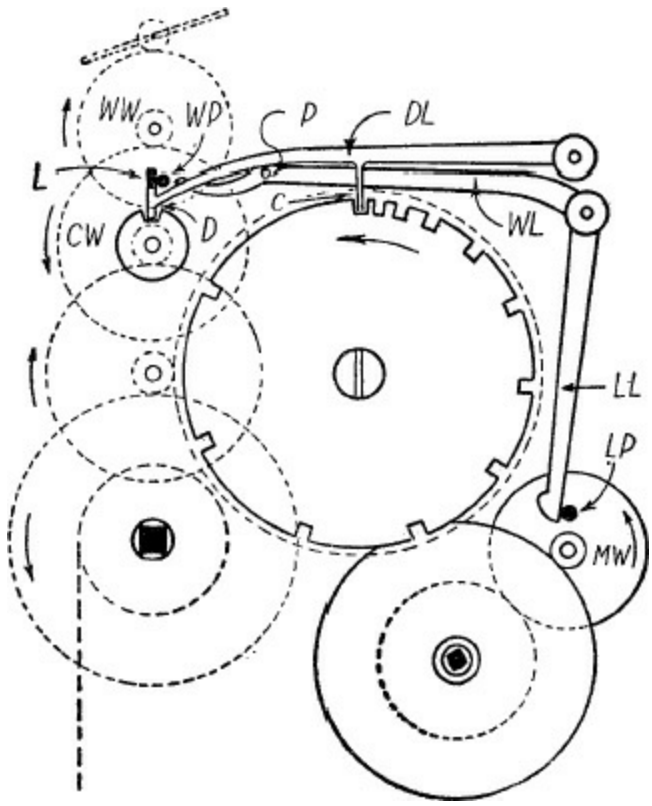

Figure 33. Counting-wheel striking mechanism as applied to hall clocks.

HALL CLOCK WITH COUNTING-WHEEL MECHANISM

The counting-wheel system as used in hall clocks differs in design from that found in the American clock, but the mechanical principle is practically the same.

Construction. Referring to Figure 33 it will be noted that the pin *WP* on the warning wheel performs two functions— (1) receiving the warning lever prior to the striking, and (2) receiving the drop lever to stop the striking. This differs from the counting wheel mechanism previously considered where the striking train was stopped when the drop lever dropped and locked in the slot in the cam.

Action of the mechanism. The striking train is stopped by the pin *WP* on the warning wheel engaging the locking point L. This is made possible by the notch on the came wheel being in position to receive the dropping point *D* and the slot in the counting wheel receiving the counting point *C*.

The dial train is so designed that the minute wheel *MW* turns once an

hour in order that the lifting pin *LP*, which sets off the striking train, may be attached to it. The lifting pin advances in the direction of the arrow, and raises the lifting lever *LL* and likewise the warning lever *WL*. The pin *P*, attached to the warning lever, lifts the drop lever and releases the pin *WP* on the warning wheel. The warning wheel is now free to turn, making nearly one revolution, when the pin *WP* engages the warning lever.

On the hour, the lifting pin on the minute wheel passes the lifting lever *LL*, permitting it to drop. The warning lever drops accordingly but the drop lever does *not*, since the cam wheel has turned a sufficient distance to prevent it. When the cam wheel has made one turn, the counting wheel, too, has turned a sufficient distance to still keep the drop lever from dropping. Striking, therefore, continues until the counting point drops into a slot on the counting wheel.

Rack-and-Snail Mechanism

The rack-and-snail system differs from the counting-wheel type in that the hour wheel regulates the number of blows struck. This being the case, the striking is always corrected to the hour indicated.

HALL CLOCK RACK-AND-SNAIL MECHANISM

Construction. Figure 34 shows the rack-and-snail mechanism as applied to hall clocks. The disk *S*, called the snail, is attached to the hour wheel and has twelve steps which govern the depth to which the rack *R* drops. The top portion of the rack has twelve or more teeth and the number of teeth gathered up by the gathering pallet *G* is determined by the position of the snail. Suppose, for example, the rack tail *T* drops to the lowest step on the snail. Twelve teeth on the rack will be liberated and the clock will strike twelve.

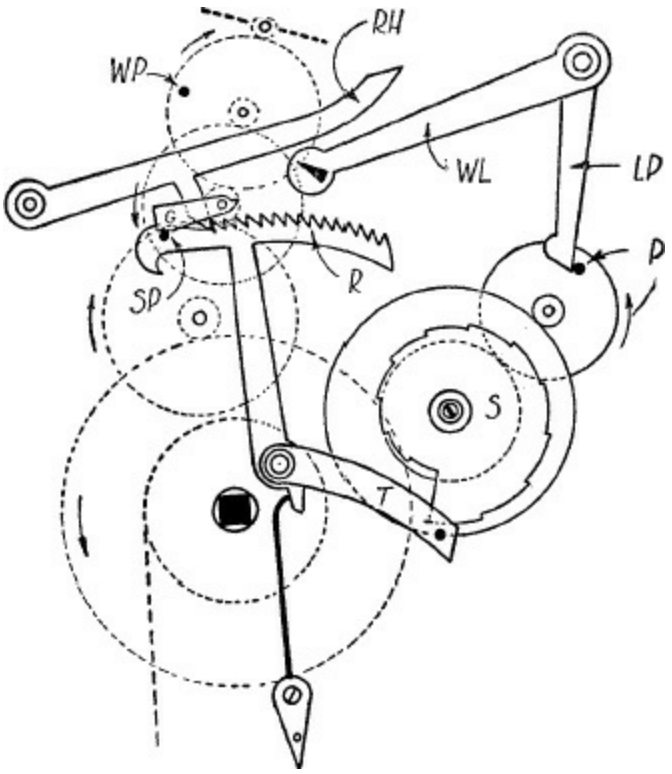

Figure 34. Rack striking mechanism as applied to hall clocks.

Action of the rack-and-snail mechanism. The pin *P* on the minute wheel advances in the direction of the arrow and raises the lifting piece *LP*. Eventually warning lever *WL* lifts rack hook *RH*, freeing the rack which falls to some step on the snail. At the same time the stop pin *SP* (which is attached to the rack) recedes from the tail of the gathering pallet, permitting the train to start. The train is soon stopped, however, because the pin *WP* on the warning wheel engages a stop piece on the back of the warning lever *WL*. Later, on the hour, the pin *P* on the minute wheel passes the end of the lifting piece *LP*, permitting the warning lever *WL* to drop and free the warning wheel. The striking train is now set in motion and the gathering pallet *G* proceeds to collect the teeth on the rack. After the last tooth is collected, the stop pin SP advances in the path of the gathering pallet tail and the striking train stops.

MANTEL CLOCK RACK-AND-SNAIL MECHANISM

Construction. The rack system employed in mantel clocks differs slightly from that generally used in floor clocks. The locking of the striking train in weight-driven clocks occurs by means of a tail on the gathering pallet

engaging the stop pin on the left portion of the rack. This plan is not used in those movements driven by a mainspring, as the following description will show.

Action of mantel clock racks. Figure 35 shows the French clock movement as typical of those found in most mantel clocks. A pin on the hour wheel raises the lifting lever *L*, carrying with it the warning lever *W*. The lifting lever also raises the rack hook *RH* by means of the pin *P*, which in turn releases the rack *R*. The rack drops to the snail, and at the same instant the stop lever *SL* (fitted to the rack hook arbor) clears the stop pin *SP* on the locking wheel. The striking train turns but is soon stopped when the pin *WP* on the warning wheel engages the stop piece on the warning lever *W*. Eventually, on the hour, the pin on the minute wheel passes the lifting lever *L* and the warning lever drops. The warning wheel is now freed and the striking begins. The gathering pallet *G* collects the teeth on the rack until finally the rack hook drops off the last tooth. The stop lever *SL*, accordingly, drops and engages the pin *SP* on the locking wheel and the striking ceases.

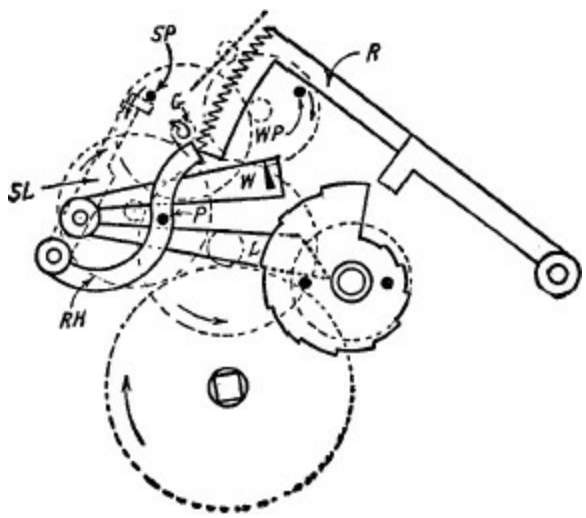

Figure 35. Rack striking mechanism as applied to French clocks.

Half-hour striking. The usual method employed in half-hour striking is to make the first tooth on the rack shorter than the rest and to fit a second pin on the minute wheel. The second pin lies a little nearer to the center than the hour pin. In this way, the rack hook is lifted to clear the first tooth only, and the clock strikes one on the half hour.

SHIP BELL STRIKE

The ship bell striking work usually employs the rack-and-snail system. The mechanism is similar to any hour and half-hour striking clock. The manner of striking differs, however, as the plan adopted is for the purpose of calling the crew to regular work shifts called “watches.”

At 12:30 p.m., the clock strikes one, called “one bell.” At 1 p.m. it strikes two, or “two bells”; at 1:30 p.m., “three bells,” etc. Each half-hour a “bell” is added until “eight bells” are struck at 4 p.m. The plan continues throughout the 24 hours and obviously the “eight bells” are struck at 8 p.m.; 12 midnight; 4 a.m.; 8 a.m. and 12 noon. After “one” bell the striking occurs in pairs as may be noted by the following example:

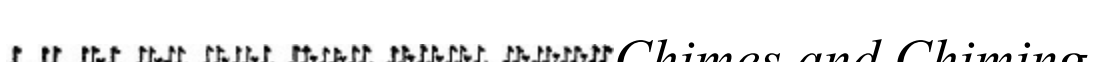

Chimes and Chiming Mechanism

Sets of bells, struck by hammers and playing fascinating tunes have been popular for centuries in clock making. There are a number of bell combinations, commonly called *chimes.* Most of these play at quarter-hour periods. Some play one chime, others two or three. In the latter case, the desired chime is played by setting a hand on the clock dial.

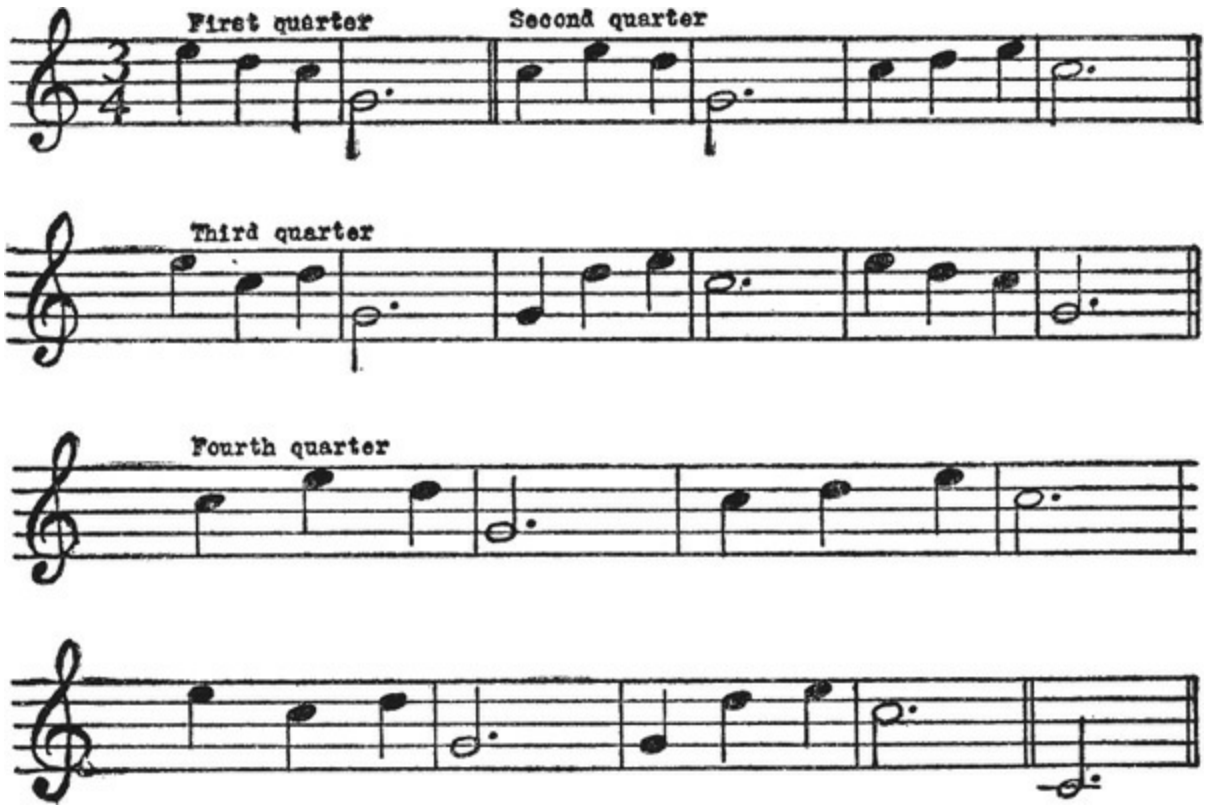

Figure 36. Westminster chime.

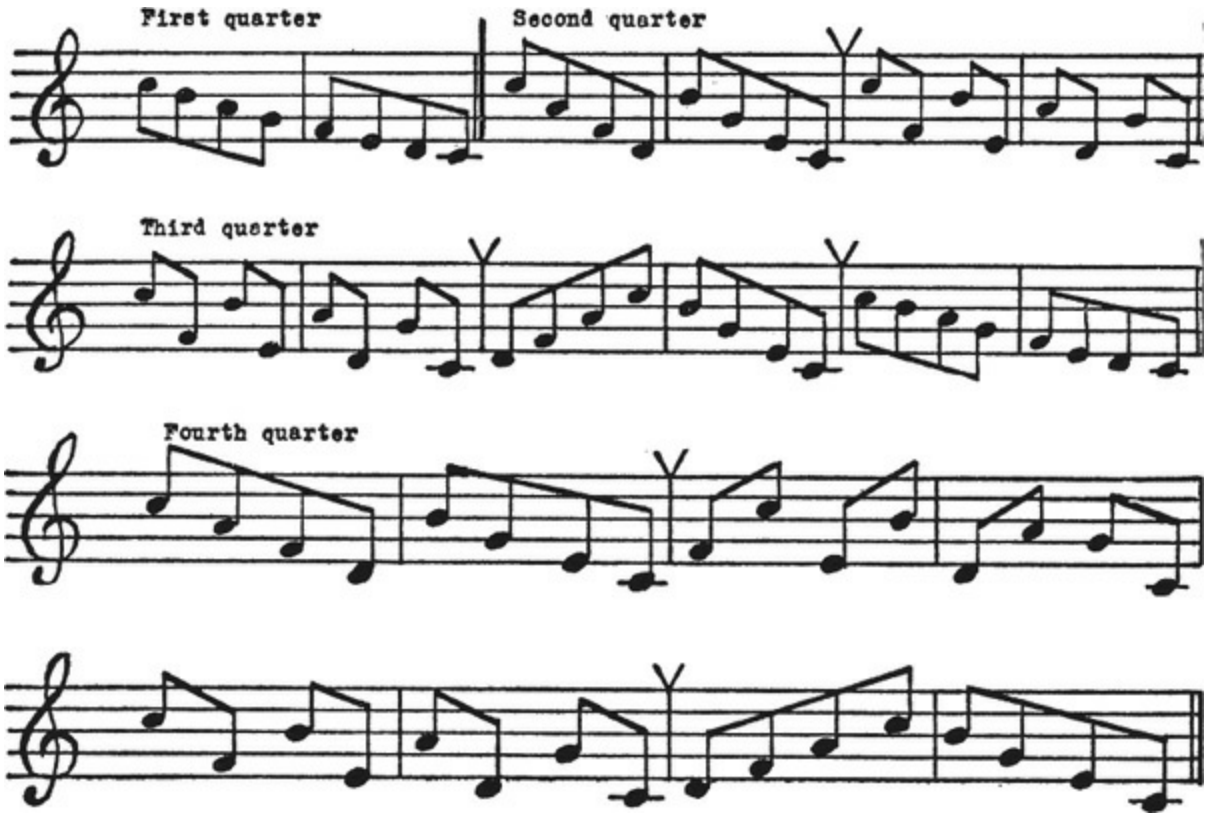

Figure 37. Whittington chime.

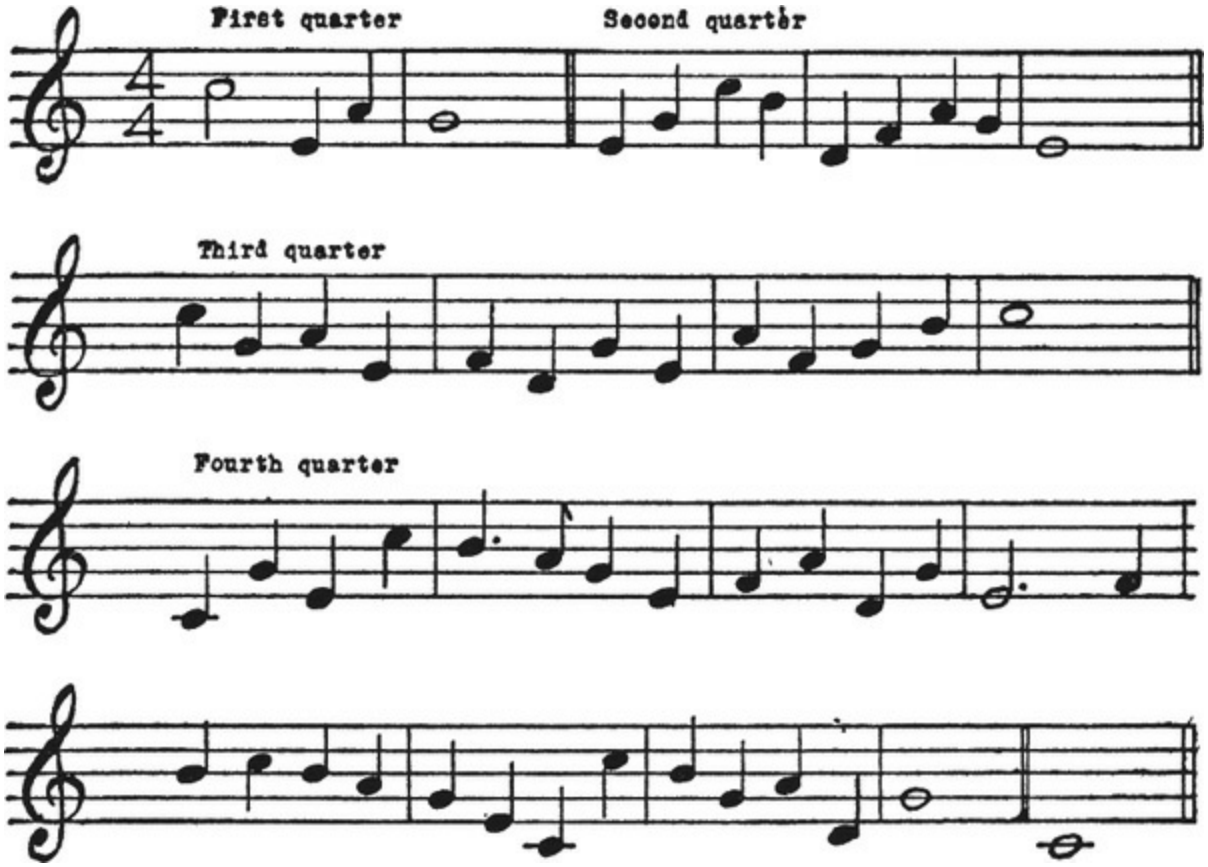

Figure 38. Guildford chime.

The more popular chimes include the Westminster, Whittington, and Gilford.

These are shown in Figures 36, 37 and 38.

CHIMING MECHANISM

Construction. Chiming clocks use three trains: (1) hour striking train; (2) timing train; and (3) chiming train. The timing train occupies the center of the movement, the hour striking train is planted to the left, and the chiming train to the right. The rack-and-snail system is the one usually used. Occasionally one finds the counting wheel used in the chiming train and the rack-and-snail in the hour striking train. The mechanical principles vary somewhat in the different makes but the majority follow the plan shown in Figure 39.

The chime snail *CS* is mounted on the minute wheel and carries four pins for raising the chime lifting lever *CL*. Also attached to the chime snail is a pin for raising the strike lifting lever *SL*. The strike warning lever *SW* releases the

strike warning wheel *S* when the chime gathering pallet *G* has gathered up the last tooth on the chime rack.

Action of the chiming and striking mechanism. The pin *P*, on the chime snail, advancing in the direction of the arrow, raises the chime lifting lever *CL*, and the chime warning lever *CW* raises with it. The chime rack hook *CH* is also lifted by means of the drop lever *D*, thereby releasing the chime rack *CR*. The tail *T* of the chime rack engages the largest radius of the chime snail *CS*, permitting the chime rack to drop a distance of one tooth. When the rack drops, the tail of the chime gathering pallet *G* is released from the rack pin *CP*. The train starts to turn, but is soon stopped when a pin on the chime warning wheel *C* engages the already raised chime warning lever *CW*. On the hour, pin *P* on the chime snail passes the end of the lifting lever *CL*, permitting the warning lever *CW* and the drop lever *D* to drop. The warning wheel *C* is freed; the rack hook *CH* drops to the rack and the first quarter chime is played. The chime ceases when the tail of the chime gathering pallet *G* engages the rack pin *CP*. The second and third quarters and hour chimes function in like manner.

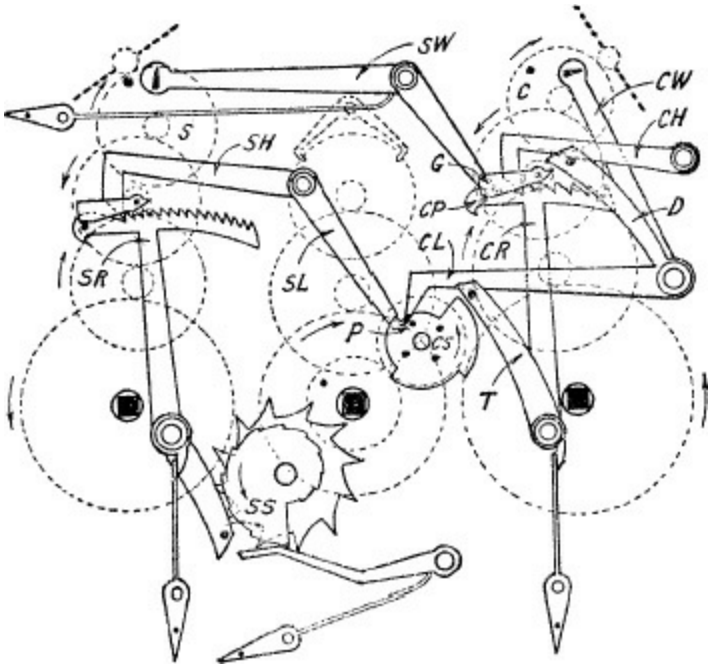

Figure 39. Chiming and striking mechanism as applied to Grandfather clocks.

Prior to the release of the chime rack at the hour chime, a pin on the chime snail has raised the strike lifting lever *SL*. The strike rack hook *SH* is

likewise raised and strike rack *SR* drops to the strike snail *SS*. The striking train starts, only to be stopped when the pin on the strike warning wheel *S* engages the stop piece on the strike warning lever *SW*. Thus it is seen that both the chime warning and the strike warning take place before the hour chime plays. A few minutes before the hour, the strike lifting lever *SL* drops off a pin on the chime snail and the strike rack hook *SH* drops to the strike rack *SR*, but no further action takes place until the pin *P* on the chime snail passes the end of the chime lifting lever *CL*. When this happens, the chime warning lever *CW*, the drop lever *D*, and the chime rack hook *CH* drop simultaneously. The chime warning wheel *C* is freed and the full hour chime is played. As the last movement of the hour chime is playing, a pin on the chime rack pulls up the strike warning lever *SW*, releasing the strike warning wheel *S*. Thus the striking of the hour immediately follows the hour chime.

It will be observed that the strike warning lever is moved near the completion of each quarter chime, but no action takes place until such time that the strike rack has dropped.

PART II

Chapter Seven

AUTOMATIC WATCHES

AUTOMATIC or self-winding watches are the newest innovation in the field of timekeeping mechanisms. They never need winding so long as the owners give them normal daily wear.

The winding mechanisms of automatic watches are found in three types: (1) One-direction winding with rotor motion limited by bumper springs, (2) one-direction winding with rotor motion unlimited, and (3) two-direction winding with unlimited rotor motion.

The older automatics use bumper springs, and the mainspring is wound when the rotor turns in one direction only. Most of the newer models are constructed in such a manner as to wind when the rotor turns in either direction.

Automatic Watch with Bumper Springs

Figure 40 shows the usual construction of the bumper-spring-type automatic. Designs vary, but the mechanical principles are the same in all makes. Fitted to the central portion of the rotor is the *winding-up click, WC.* This click engages the *winding-up* wheel, *WU,* and turns it only when the rotor turns counterclockwise. The wheel *WU* gears into the *transmission wheel, T,* and its pinion drives the *ratchet over wheel, RO.* The *stop click, SC,* engages the transmission wheel and prevents the train from turning backward when the rotor swings clockwise. On the under side of the ratchet over wheel are ratchet teeth which engage the ratchet teeth of the *Breguet winding pinion.* The Breguet winding pinion gears into the *ratchet wheel, RW.* The combined gear ratio from the winding-up wheel to the ratchet wheel is sufficiently geared down so as to allow the rotor to drop with the force of gravity when the position of the watch is altered.

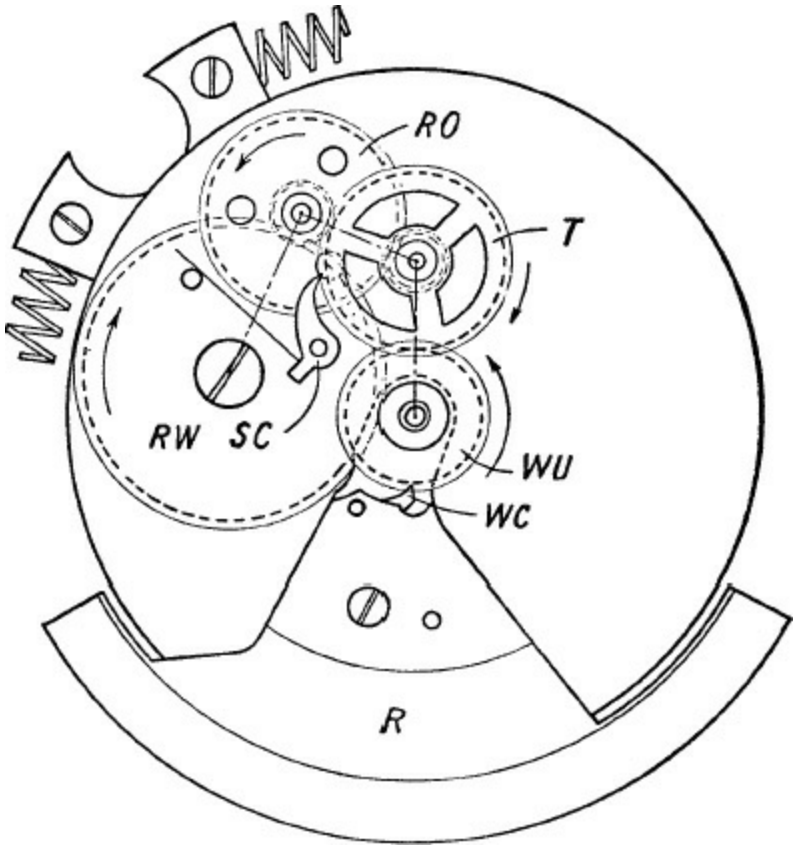

Figure 40.

When the watch is wound manually, the winding pinion turns the crown wheel which, in turn, turns the ratchet wheel, and the mainspring is wound. This, it is seen, is identical to any stem-wind watch. However, the Breguet winding pinion is turned, since it gears with the ratchet wheel. No action beyond this takes place, since the ratchet teeth on the pinion merely slip by the ratchet teeth on the under side of the ratchet over wheel.

In automatic watches the mainspring barrel contains a short, stiff spring, slightly longer than the circumference of the barrel. This spring fits securely against the barrel wall and is supplied with a hook to receive the tongue end of the mainspring. When the mainspring becomes fully wound, further winding will cause the safety device to slip, thus preventing overwinding.

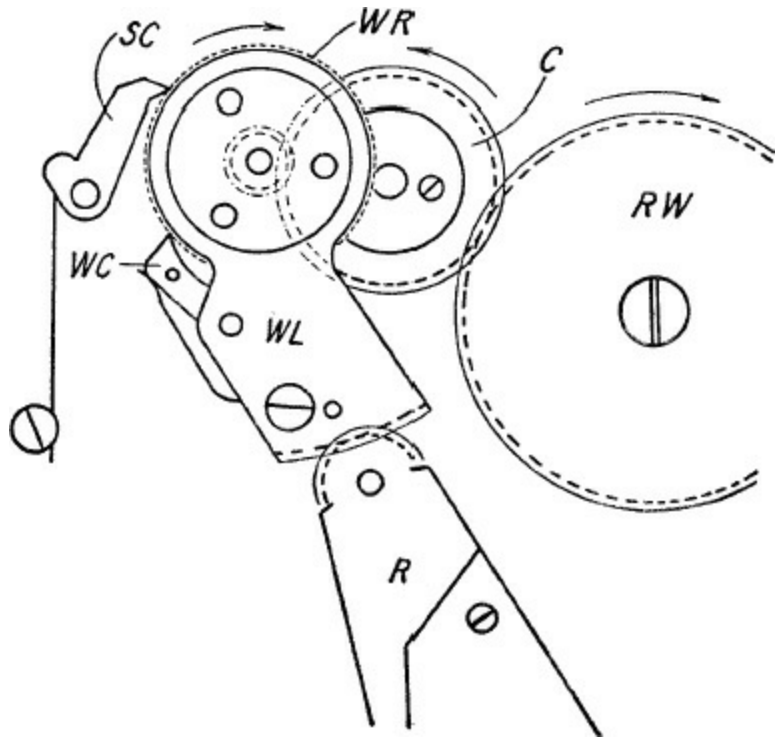

Figure 41.

Bumper Spring Automatic with Winding-up Lever

Another self-winding mechanism somewhat different from the one just described is shown in Figure 41. The Omega, Vacheron and Constantin, and a few other makes use this type of construction. A toothed rack is cut at the extremity of the rotor. This rack gears with the *winding-up lever, WL,* which is turned to and fro as the rotor oscillates. The *winding-up click, WC,* is attached to the lever *WL* and turns the *winding-up ratchet, WR,* in a clockwise direction only. The *stop click, SC,* prevents the winding-up ratchet from turning counterclockwise. A pinion on the lower end of the winding-up ratchet turns the *crown wheel, C,* which, in turn, drives the *ratchet wheel, RW.* Thus the mainspring is wound.

This is possibly the simplest, and yet efficient, automatic that has been conceived up to now.

Two-Direction Winding Automatic with Reversing Lever

The two-direction winding mechanisms make use of some very ingenious devices that we shall now examine. Consider first the movement shown in Figure 42. Suppose the rotor turns in a clockwise direction. The *rotor gear RG*, fixed to the rotor, engages the *reversing pinion, R.* Because of the direction of rotation of the rotor gear, reversing pinion *R* is thrust against the *winding wheel, W^1*, and turns it in a clockwise direction. Following the train through as indicated by the dot and dash center line from rotor to ratchet wheel, it is seen that the ratchet wheel turns clockwise and the mainspring is wound.

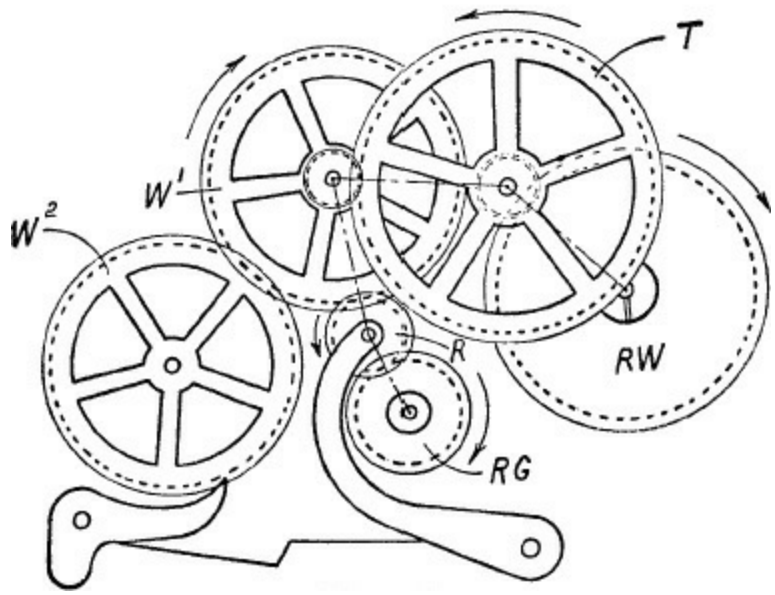

Figure 42.

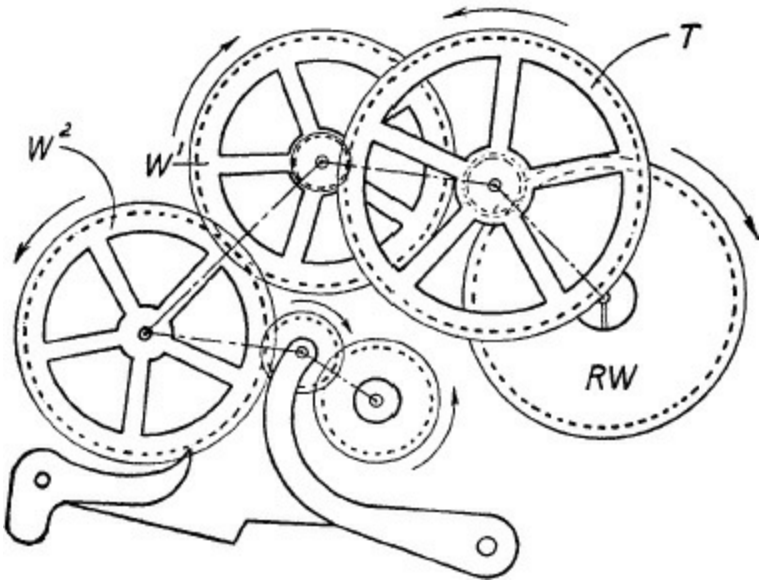

Figure 43.

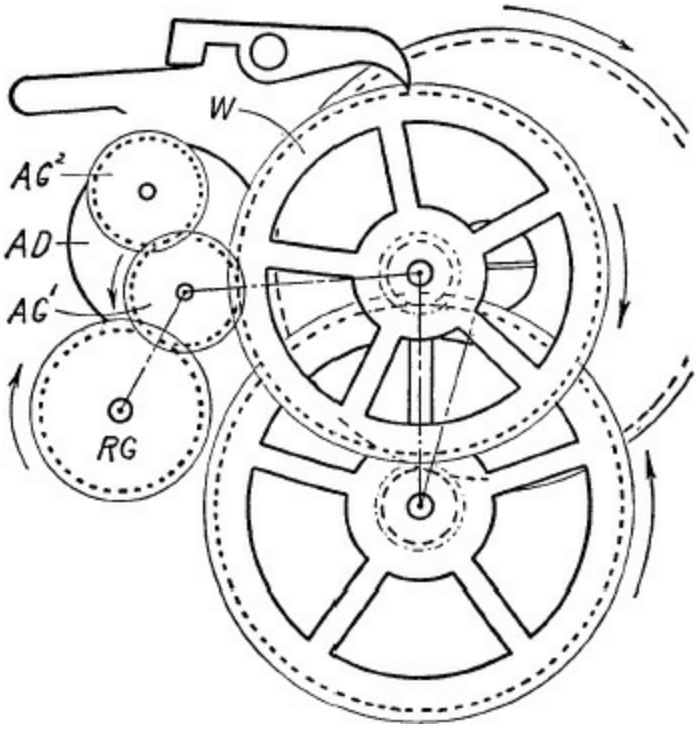

Figure 44.

Suppose, now, that the rotor gear turns counterclockwise. In this case the reversing pinion will be thrust against the winding wheel W^2 as shown in Figure 43. Since an extra wheel has been added to the train, the direction of

rotation of the wheels W^1, T and RW remains the same and the mainspring continues to be wound.

Automatic Watch with Alternating Discs

Another type of double winding automatic mechanism is shown in Figure 44. In this model a device called the *alternating disc, AD,* is used. On the disc are mounted two gears, the *first* and *second alternating gears.* If the rotor is turned clockwise, the *rotor gear*, RG, drives the first alternating gear AG^1 directly into the path of the winding-up wheel *W*, turning the latter clockwise.

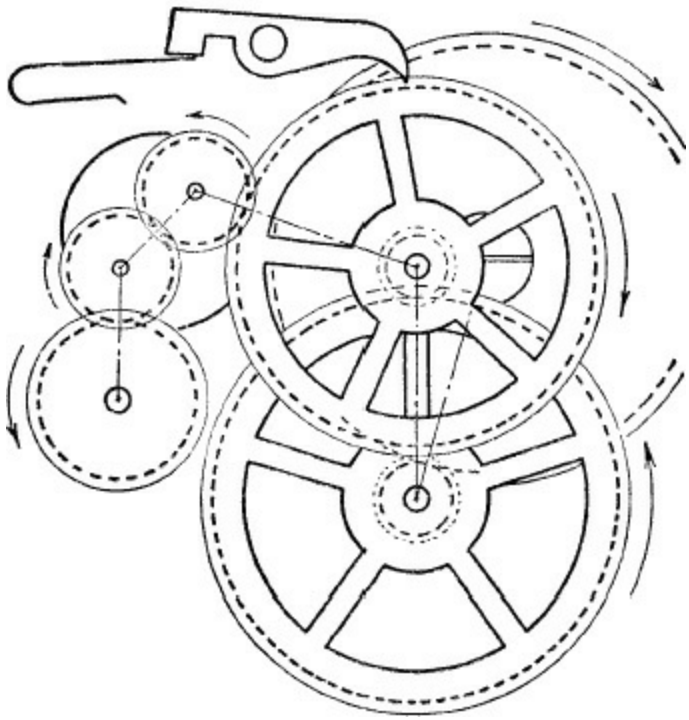

Figure 45.

If the rotor turns counterclockwise, the rotor gear remains meshed with the first alternating gear, as before. However, with the direction reversed, the first alternating gear is thrust to the left while the second alternating gear AG^2 is moved to the right, resulting in the second alternating gear engaging the winding-up wheel *W*. Since another gear has been inserted in the train the direction of rotation of the winding-up wheel remains the same. This is seen by comparing Figures 44 and 45.

In this type of mechanism, no disengaging click or ratchet is required

when the watch is manually wound. The first and second alternating gears are merely pushed out of action.

Automatic Watch with Two Reversing Clicks

Figure 46 shows the winding mechanism of the Tudor automatic, a product of the Rolex Company. It is designed on a very different principle from those heretofore considered. The *rotor gear, RG,* engages the *first winding-up wheel,* W^1. The first winding-up wheel turns the *second winding-up wheel,* W^2, and each wheel W^1 and W^2 carries a three-pronged click. The clicks are fitted to the upper sides of the winding-up wheels. Fitted above and engaging the extremities of the three-pronged clicks are the *notched discs* N^1 and N^2. These discs carry pinions that drive the *transmission wheel T.* The clicks are so designed that the discs are turned only when the winding-up wheels turn counterclockwise, and since all wheels mesh it is obvious that one or the other of the winding-up wheels turn clockwise without doing any work — the clicks merely slip by the notches in the notched discs.

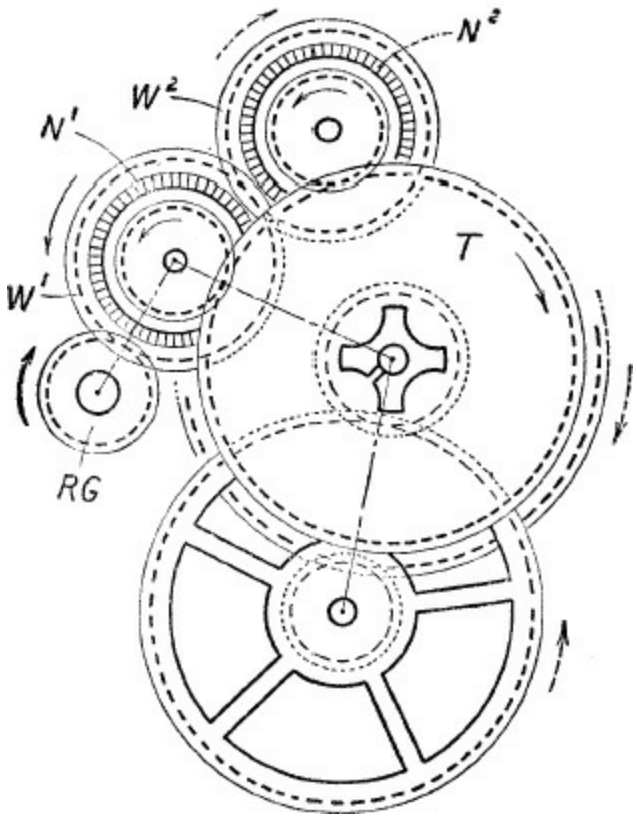

Figure 46.

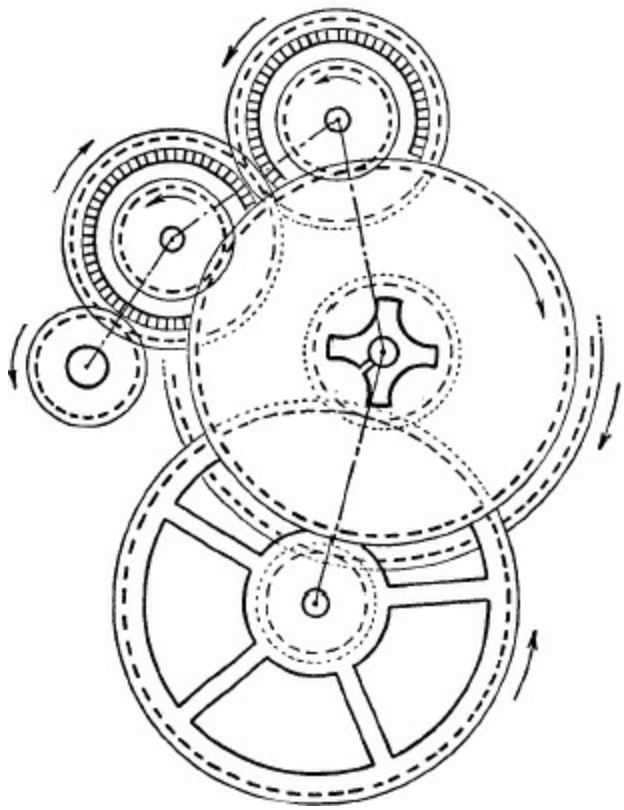

Figure 47.

This is made clear by comparing Figures 46 and 47. If the rotor gear is turning clockwise, follow the center line as shown in Figure 46. If, on the other hand, the rotor gear is turning counterclockwise, follow the center line as shown in Figure 47.

Automatic Watch with One Reversing Click

This automatic, Figure 48, is similar in principle to the one described above but radically different in design. The reversing unit consists of a disc to which the reversing click is mounted. A staff is fitted through the disc and is pivoted between the upper plate and a thin bridge. There are two winding-up wheels, W^1 and W^2, fitted to the staff, which turn freely. The first and smaller winding-up wheel lies above the disc and is geared directly with the rotor gear *RG*. By means of the click on the disc, this same wheel W^1 drives the disc clockwise only..

The second winding-up wheel W^2 is fitted to the lower side of disc, is turned by the *reversing wheel assembly, R,* and does *not* engage the rotor

gear. The reversing wheel assembly consists of two wheels turning as one, the *upper wheel*, R^1, being slightly smaller than the *lower wheel* R^2. The rotor gear turns the upper reversing wheel R^1 and the lower reversing wheel R^2 turns the *lower winding-up wheel*, W^2, which, in turn, turns the disc through the functioning of the click. Thus either winding-up wheel turns the disc but only when the motion is clockwise.

Secured to the staff that carries the disc and click is the *pinion*, *P*, which drives the *transmission wheel*, *T*. Through its pinion the winding function is carried through the train to the ratchet wheel and thus the watch is wound. The principle of operation becomes clear by noting the center line in the illustration. When the rotor turns counterclockwise as indicated by the arrow *A*, follow the center line *A*. When the rotor turns clockwise, as indicated by the arrow *B*, follow the center line *B*. The arrows B^1 and B^2 indicate the direction of motion of the wheels R^2 and W^2. The heavy arrow A^1 indicates the direction of motion of the winding-up wheel W^1.

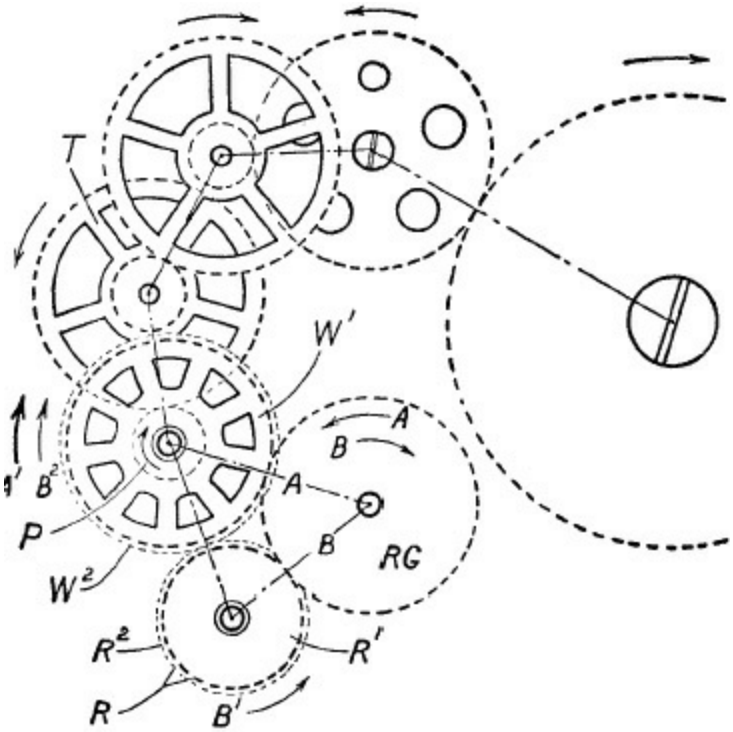

Figure 48.

Automatic Watch with Heart Piece

Some of the newer types of automatic mechanisms employ an *heart piece* or *cam.* The one described herewith, Figure 49, is the product of the International Watch Company of Schaffhausen, Switzerland. The heart piece *H* is fitted to the rotor and as the assembly swings to and fro the *rocking lever R* is caused to swing in like manner. It is interesting to note that this movement is much like the lever escapement where a roller jewel enters a fork slot and moves the lever away from its banking. Two levers, C^1 and C^2, called *automatic clicks* are fitted to the rocking lever and are placed in such manner as to alternately turn the *winding-up* wheel *W.* This function is at once evident when we note that the rocking lever is pivoted at the point *P*. When the rocking lever turns in the direction of the arrow *A*, the hook of the automatic click C^1 turns the winding-up wheel *W* clockwise. The hook on the automatic click C* idles along counterclockwise without doing any work. When the motion of the rocking lever is reversed, that is, turning in the direction of the arrow *B*, the hook of the automatic click C^2 turns the winding-up wheel clockwise as before while the hook of the click C^2 idles along counterclockwise. Both automatic clicks are held in position against the winding-up wheel by means of the *click spring S.* Thus it is seen that the mainspring is wound when the rotor is turned in either direction.

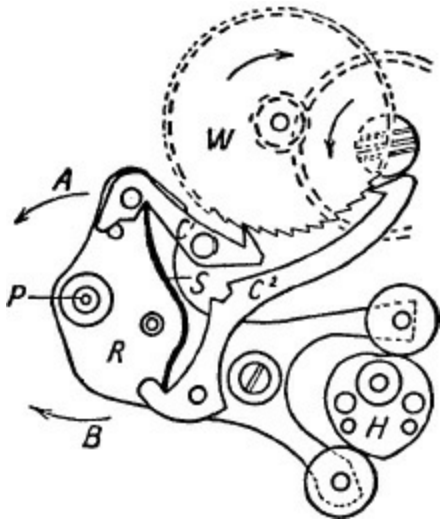

Figure 49.

A unique feature of the International automatic is the ability to release the power of the mainspring without having to take off the automatic assembly. And further, a new mainspring may be fitted without disturbing any of the

parts except the ratchet wheel and the barrel bridge. This is accomplished by pressing back the automatic click C^1 until it enters the *notch N* of the click C^2, as shown in Figure 50. By doing this the mainspring power is released and the barrel is taken out in the usual way. After replacing the barrel and moving the rotor, the two clicks automatically engage the teeth of the winding-up wheel.

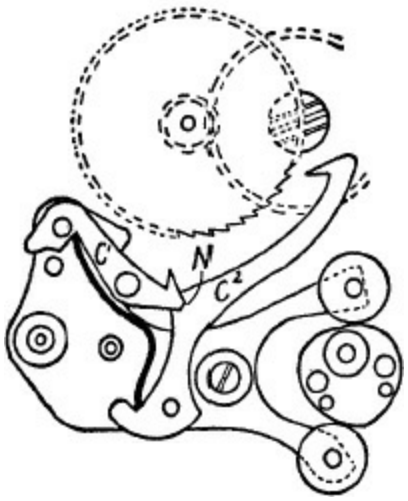

Figure 50.

Le Coultre Automatic Watch

This watch, Figure 51, has no manual winding mechanism or stem in the usual meaning of the term. The hands are set to time by means of a button on the back of the case.

An up-and-down indicator is provided, something quite new in automatics, and is located between the dial center and nine o'clock.

The mainspring does not need a slip spring as the rotor is locked when the mainspring is nearly fully wound.

The self winding action is similar to the mechanism described on page 189 (automatic with alternating disc) and need not be considered here. The functions that call for special analysis are: (1) the rotor locking device and (2) the winding indicator mechanism.

Rotor locking device. Referring to Figure 53, it will be noted that the barrel arbor is given a left handed thread. On this threaded portion is fitted a disc which is prevented from turning of itself by being pierced by two posts

which are secured to the barrel cap. Thus the disc is moved *up* as the watch runs down, since the barrel is turning and the disc is turning with the barrel. On the other hand, the disc moves *down* when the watch is automatically winding since the barrel arbor is turning and its threaded portion is being unscrewed from the disc. The *locking lever L* has a conical head and, by reason of its shape, is pushed aside as the disc moves downward which obviously takes place when the watch is automatically winding.

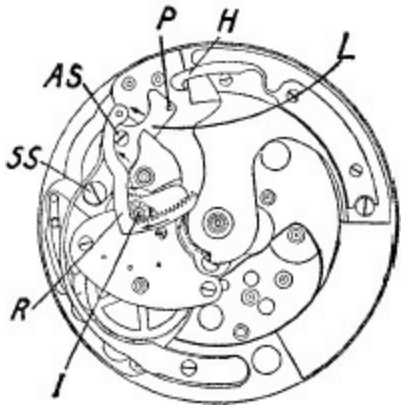

Figure 51.

Figure 52.

Referring now to Figure 51, the same locking lever is seen but from a different point of view, that is, horizontal and the direction of motion during winding is counterclockwise. This is shown in the illustration by following the arrows. Note also that the locking lever is pivoted at the shoulder screw *SS*. Assuming that the watch is automatically winding, the pin *P* on the locking lever will eventually engage the hook *H* and the rotor will be locked. Since the rotor is locked the winding will have ceased for the time being and the movement will run down. The locking lever, now turning clockwise, will

eventually release the rotor. This will permit the winding to again take place, that is, if the watch is being worn.

Winding indicator mechanism. The function of the *indicator rack R* is clearly shown in Figure 51. The adjusting screw *AS* on the locking lever L pushes on the indicator rack when the winding takes place. Incidentally, the teeth on the rack turn the *indicator pinion I* clockwise and eventually stops when the rotor is locked. Compare the position of the locking lever and the indicator rack in Figures 51 and 52.

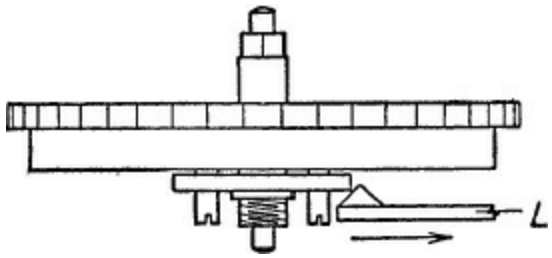

Figure 53.

Pierce Automatic Watch

Another rather unique type of self-winding watch is the Pierce automatic shown in Figure 54. Here the winding-up weight slides forward and backward in steel rods. The mainspring is wound only when the weight slides to the right. The principle of operation is shown in the illustration and a detailed analysis is not required.

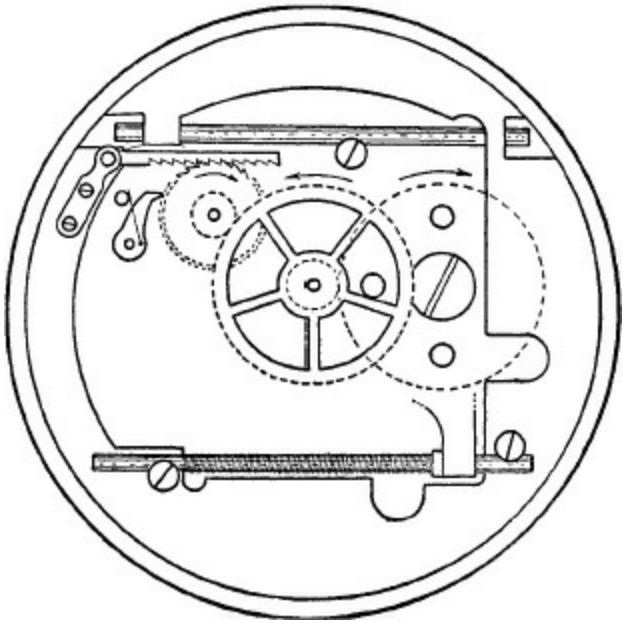

Figure 54.

PART II

Chapter Eight

STOP WATCHES AND CHRONOGRAPHS

THE PRECEDING pages have dealt with watches that register time as a continuous phenomenon, that is, *recording the mean of sun time.* There are also timepieces so designed as to indicate *periods* of time, their scope being limited to determining the duration of some particular event, a horse race for instance. This involves the starting of the timepiece at the beginning of the event or phenomenon to be timed, and the stopping of the timepiece when the event or phenomenon is terminated. The interval of time is thus determined.

The Stop Watch

The simplest mechanism for this purpose is called the *stop watch.* It has a sweep second hand encircling a large dial and a minute hand fitted to a small dial, which may be started, stopped, and returned to zero by merely pressing the crown or button on the side of the case.

The majority of stop watches are so designed that one revolution of the hand on the large dial indicates a lapse of one minute, and the spaces are divided to show fifths of seconds. The small dial shows the minutes and a total of thirty minutes to a revolution of the hand is the plan usually adopted.

When greater precision in timing is desired, other types of timers are made for the specialized needs of science and industry. Special-purpose timers are designed to show $^1/_{10}$, $^1/_{20}$, $^1/_{30}$, $^1/_{50}$, or $^1/_{100}$ of a second. They differ only in the design of the dial, the train, and the number of vibrations of the balance.

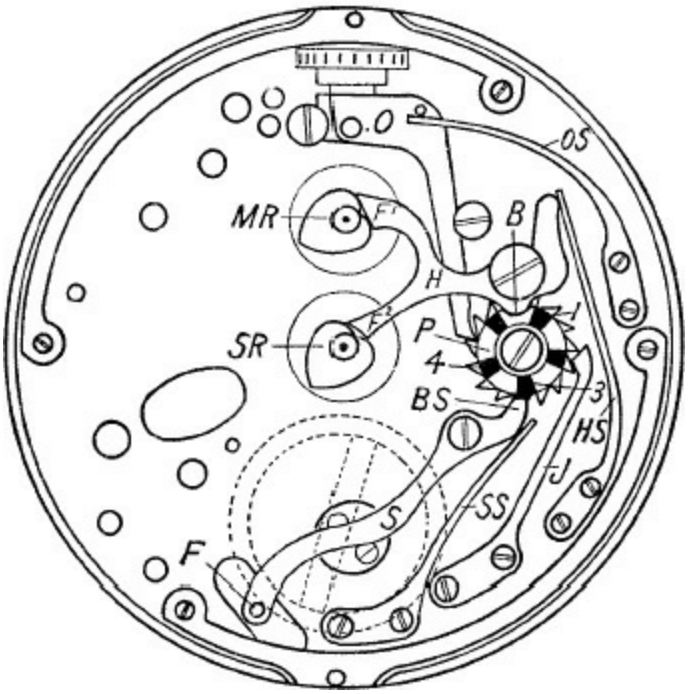

Figure 55.

ANALYSIS OF THE MOVEMENT

Construction. Stop watches have the recording mechanism located under the dial. Figure 55 shows a 19-ligne model by Ed. Heuer & Company. The seconds recording wheel is planted in the center of the movement and has a long pivot extending through a hole in the dial. Fitted to the long pivot is the *seconds recording runner, SR,* a kind of cannon pinion, consisting of a heart-shaped cam and a pipe to which the sweep second hand is attached. The seconds runner is frictioned to a groove on the pivot of the seconds wheel by means of a U-shaped spring, one end of which presses into the groove through a slot in the pipe. The other end rests on the outside of the pipe. The tension of the spring is sufficient to cause the seconds runner to turn in unison with the seconds wheel, but not enough to withstand the force of the *hammer, H,* when it impinges the heart cam.

Situated above the seconds wheel is the *minutes recording* wheel. It, too, has a long pivot extending through a hole in the dial, and carries the *minutes recording runner, MR,* the construction of which is identical to the seconds runner described above.

The minutes runner and the seconds runner are returned to zero by means of the hammer *H* and the heart cams. The motion of the hammer is attained

through the circular motion of the *pillar wheel, P*.

The movement runs only at the time when the recording takes place. This is realized by means of a delicate *friction spring, F*, which, in flipping away from the balance rim, gives motion to the balance, or, conversely, in driving against the balance rim, stops its motion. The friction spring is secured to the *start-stop lever, S*, which is also actuated by the pillar wheel.

All of the above functions, it is observed, are actuated through the pillar wheel, which is turned by the *operating lever*, O, through its connection with the stem and crown. Note also that the operating lever, the stop-start lever, and the hammer are under tension through contact with the springs *OS, SS*, and *HS* so as to perform their respective functions properly.

The spring *J* which rests against the ratchet of the pillar wheel is called the *jumper*. Its function is to assist the movement of the pillar wheel to its proper position of rest. Obviously the spring must be quite strong so that the *beak* of the jumper comes to rest firmly between two ratchet teeth.

ACTION OF THE MOVEMENT

Starting function. The mechanism is at rest and hands are in the zero position. The crown is pressed and the operating lever *O* is moved downward, pushing a ratchet tooth of the pillar wheel a distance comparable to the length between two teeth. As the movement takes place, pillar *1* pushes the beak *B* of the hammer *H* outward, finally coming to rest on the outer surface of pillar *1*. The heart cams are thus released.

Simultaneously with the above movement, the beak *BS* of the start-stop lever *S* drops off pillar *3* into the next space, thereby permitting the lever and its friction spring *F* to move counterclockwise, flipping the balance into motion as it goes. Thus the recording hands are started.

Stopping function. Pressing the crown a second time the pillar wheel is turned and beak *BS* of the start-stop lever mounts pillar *4*. As a result the start-stop lever advances clockwise in the path of the balance and the movement is stopped. During this period the beak *B* of the hammer remains in contact with the outer surface of pillar *1*.

Hands to zero function. Pressing the crown a third time the beak *B* of the hammer drops off pillar *1* and the flat faces F^1 and F^2 impinge the heart cams. Thus the recording hands are returned to the zero position. The start-

stop lever remains mounted on pillar *4* until such time as the above action is repeated.

The Chronograph

The chronograph may be defined as a timepiece in which the functions of the conventional watch and the stop watch are combined. Chronographs are found in several varieties. Some are so designed that the recording hands are started, stopped, and returned to zero by means of a push piece in the crown or a single button on the side of the case. This type is called the *single-button chronograph* and the mechanism is quite similar to the stop watch. Another type equipped with two buttons is called the *double chronograph.* In most models successive presses of one button start, stop, and again start the recording hands without returning them to zero. The second button is used only for returning the hands to zero. This type of chronograph is rapidly superseding the single button type because of its greater usefulness. A third type of chronograph, called the split second timer, is useful in enabling the operator to measure two close intervals of time, as for instance, the first and second winners of an auto This is made possible by having two sweep hands, one planted directly above the other. The two hands may be started, stopped, and returned to zero the same as in any stop watch. However an extra button on the side of the case will, when pressed, stop one of the hands, the other hand continues to move as heretofore. A second press of the button causes the stopped hand to overtake the hand in motion and the two hands again turn together.

Double Chronograph with Pusher-type Hammer

Construction. Let us examine the mechanism of the double chronograph with pusher-type hammer, the type usually found in wrist watches. The mechanical principles of the different makes will be found to vary slightly but the mechanism shown in Figure 51 may be considered as typical of the majority.

The chronograph differs from the stop watch in that the movement runs continuously. Because of this a different design is required and we find, in place of the start-stop lever, a lever called the *seconds coupling clutch.* This lever, *CC*, Figure 56, starts and stops the recording hands in a manner which

is similar to the start-stop lever of the stop watch. The fourth wheel carries the *driving wheel, D,* and the seconds coupling clutch carries the intermediate wheel *J*. These wheels remain in gear and run continuously. When the pillar wheel is turned through its connection with the operating lever and button number *1*, the beak *BC* of the coupling clutch drops off a pillar of the pillar wheel and, in so doing, the intermediate wheel *I* engages the chronograph runner *C*. Thus the recording hands are started.

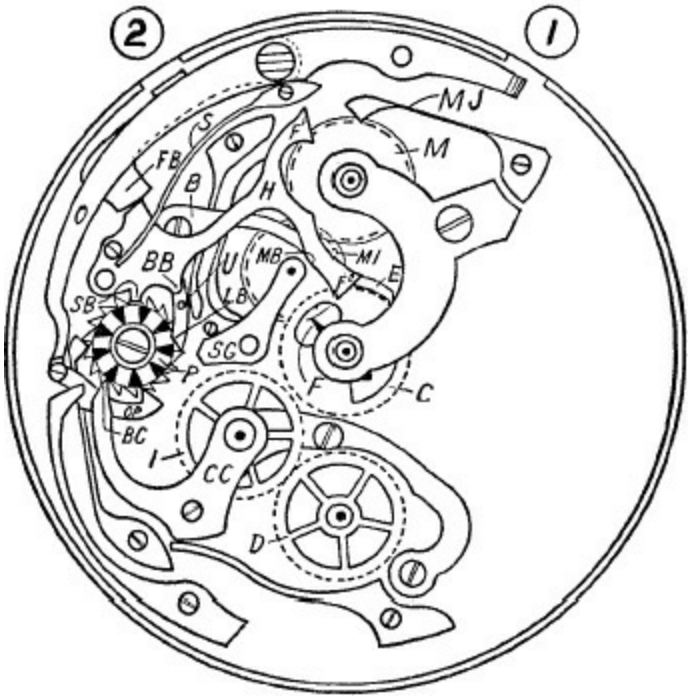

Figure 56.

The chronograph runner *C* and the minutes runner *M* are of similar construction. On each of the runners there is a heart cam and a long pivot that extends through the movement. To each pivot a hand is fitted for the recording of seconds and minutes respectively.

The *brake lever, B,* is actuated in two ways: (1) by the pillar wheel *P* and (2) by the hammer *H*. The brake lever is necessary to keep the chronograph hand from moving at such times when the hand is supposed to be at rest.

Button number *2* cannot be pressed when the hands are moving, as the beak *SB* of the hammer would butt against one of the pillars of the pillar wheel.

The finger *F* on the chronograph runner pulls the intermediate wheel *MI*

around one tooth at a time. The wheel *MI* gears with the minutes runner *M* and, through the minutes runner, minutes are recorded on the dial. However when the hammer returns the recording runners to zero, the intermediate wheel *MI* must be pulled aside free of the finger *F*. This is accomplished by means of the beak *BB* on the hammer.

ACTION OF THE DOUBLE CHRONOGRAPH

Starting function. The recording hands are at zero and the end *E* of the brake lever *B* rests against the rim of the chronograph wheel. Button number *1* is pressed and, through its connection with the operating lever *O* and the pawl *OP*, pillar wheel *P* is turned the required distance. The brake lever is raised from the chronograph wheel as a result of the beak *LB* mounting a pillar of the pillar wheel. Simultaneously the beak *BC* of the seconds coupling clutch *CC* drops between two pillars of the pillar wheel, permitting the engagement of the intermediate wheel *I* with the chronograph runner *C*. Thus the recording begins.

Stopping function. Pressing button number *1* a second time causes the beak of the coupling clutch to mount a pillar of the pillar wheel and the hands stop. At the same moment the beak *LB* of the brake lever *B* drops between two pillars of the pillar wheel permitting the opposite end *E* to rest against the rim of the chronograph wheel.

Hands to zero function. The hands are returned to zero by pressing button number *2* which actuates the fly-back lever *FB*. The fly-back lever in turn presses the hammer *H*. As the hammer moves toward the heart cams, beaks *BB* and *MB* are brought into action. Beak *BB* pushes aside the brake lever through its contact with the upright pin *U* thereby releasing the chronograph runner. Beak *MB* wedges into the sliding gear frame *SG* and the minutes-recording mechanism is cut out of action. Lastly the flat faces F^1 and F^2 impinge the heart cams and the recording-hands are returned to zero. When button number *2* is released, the hammer is returned to its position of rest by the spring *S*.

It should be observed that the return to zero of the minutes runner is not attended entirely by the hammer but rather by the action of the jumper *MJ*.

Some chronographs have an hour recording wheel and dial. This added function is operated by a wheel attached to the barrel, and the complete

mechanism is separate and lies under the dial.

Double Chronograph with Releaser-type Hammer

Construction. The mechanical action of this chronograph, Figure 57, is identical in principle to the one described above except that the hammer is released instead of being pushed. The function is attained through the *hammer bolt, HB.* When button number *2* is pressed for the returning of the recording hands to zero, the fly-back lever *FB* is actuated and its beak presses the hammer bolt, thereby releasing the pin *P*. The hammer spring S forces the hammer to the heart cams and the recording hands are returned to zero. In this type of chronograph, the hammer remains against the heart cams until button number *1* is pressed to start the recording hands.

Figure 57.

Double Chronograph with Reversing Cams

Construction. A new model that substitutes cams for the pillar wheel is shown in Figure 58. Two cams are riveted together and turn as one piece. The movement is first clockwise and then counterclockwise, and the oscillating

motion is attained by means of a jointed operating lever, *O*.

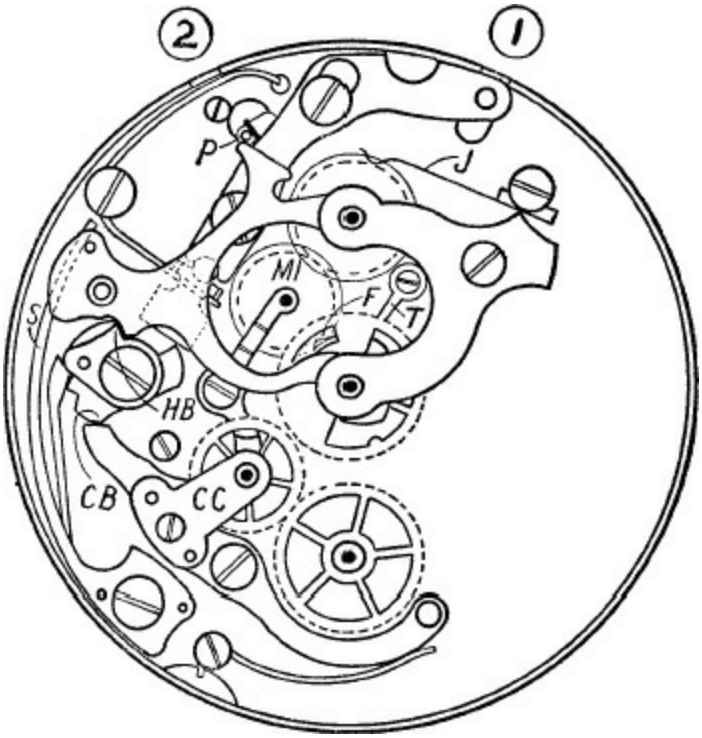

Figure 58.

The coupling clutch *CC* is dropped and raised by the beak *CB* on the cam.

The hammer is raised by the beak *HB* on the cam and locked by the pin *P*. Pressing button number *2* pushes the pin *P* aside, the hammer drops and the hands are returned to zero.

This model has no brake lever. A tension spring *T*, resting on the underside of the chronograph runner, holds the wheel from turning after the recording hands are stopped.

Another point of difference is the action of the flexible finger *F* for tripping the intermediate wheel *ML* The wheel *MI* need not clear the finger *F* during the recording hands-to-zero operation as is necessary in the conventional chronograph. Instead the flexible finger is merely pushed aside since the hammer spring *S* is stronger. And again the jumper spring *J* is weaker than the flexible finger thus permitting the minutes recording mechanism to function satisfactorily.

Chronograph Without Pillar Wheel

Construction. Another model that dispenses with the pillar wheel and cams is shown in Figure 59. The hammer *H* is the all-important piece, for all functions depend upon it. The hammer rotates around the pivot *CP* and its several functions are listed as follows: (1) The plane surface S——S actuates the sliding gear through the eccentric screw *E*. (2) The eccentric screw *EC* raises and drops the coupling clutch *CC*, and (3) the extremities of the hammer impinge the heart cams and return the recording hands to zero. While the above functions are being performed, the hammer spring *HS* will force its beak *HB* into the notches, *1*, *2*, and *3*. Thus the hammer spring assists the hammer in performing its several functions.

Like the preceding chronograph, this model has no brake lever. The hands are held from turning by the tension spring which is planted under the chronograph wheel.

ACTION OF THE MOVEMENT

Starting function. The end *E* of the operating lever *0* fits into a U-shaped opening of the hammer. Pressure applied to button number *1* moves the end *E* to the left (arrow *D)* and the hammer is turned counterclockwise (arrow *B)*. As the eccentric screw *EC* moves to the *right*, the coupling clutch is dropped and the recording begins. At the same instant the hammer spring *HS* assists the movement of the hammer and the beak *HB* comes to rest in notch *1*,

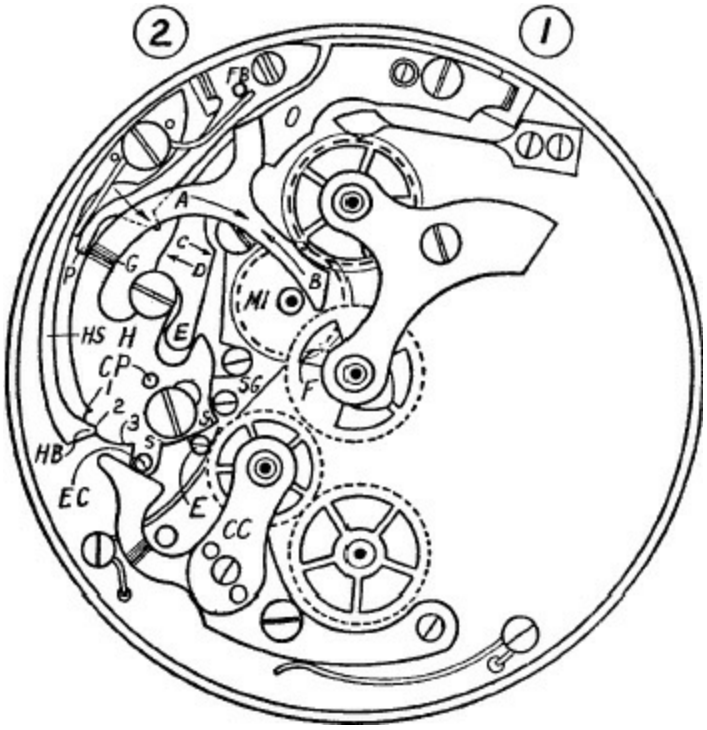

Figure 59.

Simultaneously with the above movement the sliding gear *SG* is dropped so the intermediate wheel *MI* may be turned by the finger *F*.

Stopping function. This chronograph differs from the preceding designs in that the button number *1* starts the recording hands but does not stop them. To stop the hands, button number *2* is pressed, and to return the hands to zero, button number *2* is pressed a second time.

Returning now to the function of stopping the recording hands, pressure on button number *2* actuates the flyback lever *FB*. (Incidentally the hammer lies to the extreme left and the beak *HB* of the hammer spring rests in notch *1*. The reader must visualize the location of the parts in order to understand the function to be described presently.) The fly-back lever, moving in the direction of the arrow, engages and pushes the operating lever *0* to the right as shown by the arrow *C*. The hammer is thereby rotated clockwise (arrow *A)* and the eccentric screw *EC* raises the coupling clutch. Thus the recording hands are stopped.

Simultaneously the sliding gear *SG* is shifted out of action.

Coupled with the above action, the beak *HB* of the hammer spring drops *nearly* into notch *2*, for the hammer cannot move further. The reason for this

may be noted because the groove *G, under* the hammer, meets the point *P* on the fly-back lever. Thus the hammer is stopped dead. When button number *2* is released, the fly-back lever returns to its position of rest and the hammer is freed. The hammer being freed, hammer spring *HS* takes over and causes the hammer to advance slightly further (clockwise) until the hammer spring beak *HB* drops into notch *2* of the hammer.

Hands-to-zero function. The illustration shows the position of all parts just prior to returning the recording hands to zero. Pressing button number *2* a second time causes the point *P* on the fly-back lever to press directly on the hammer, since the position of the hammer does not permit the fly-back lever to pass under as heretofore. The hammer spring assists in the movement and instantly its beak *HB* comes to rest *nearly* to notch *3* on the hammer. Simultaneously, the extremities of the hammer reach the heart cams, and the recording hands are returned to zero.

When the recording hands are again started by pressing button number *1*, the hammer turns counterclockwise without halting its motion at notch *2*. Instead, the hammer spring beak *HB* comes to rest on notch *1*.

Split-Second Chronograph

Construction. The split-second chronograph is constructed on a similar plan to that of the single button chronograph. It differs only in that a special mechanism is added together with a separate button for its operation. Constructional designs are many and varied. In some makes the split-second wheel lies under the dial as shown in Figure 55. The post of the split-second wheel is hollow and rides freely on the pivot of the chronograph wheel. The split-second hand, obviously, lies below the chronograph hand. In another design the split-second wheel lies on the bridge side of the movement and has a slender pivot which extends through a hollow chronograph runner. In this design the split-second hand lies above the chronograph hand. In either design the split-second wheel is of similar construction.

Referring to Figure 60, we see one of the latest and improved designs. The split-second wheel has a smooth rim on which two brake arms may rest to stop the wheel. A separate pillar wheel actuates the brake arms. When the arms are open the split-second wheel turns in unison with the chronograph runner by means of a very ingenious device. The lever *L* is pivoted to the rim

of the split-second wheel, and the spring *S* provides the necessary tension to force the *roller* to the lowest point on the heart cam *C*. The heart cam is secured to and turns with the chronograph runner. Thus both wheels turn together until such time that the brake levers button is pressed.

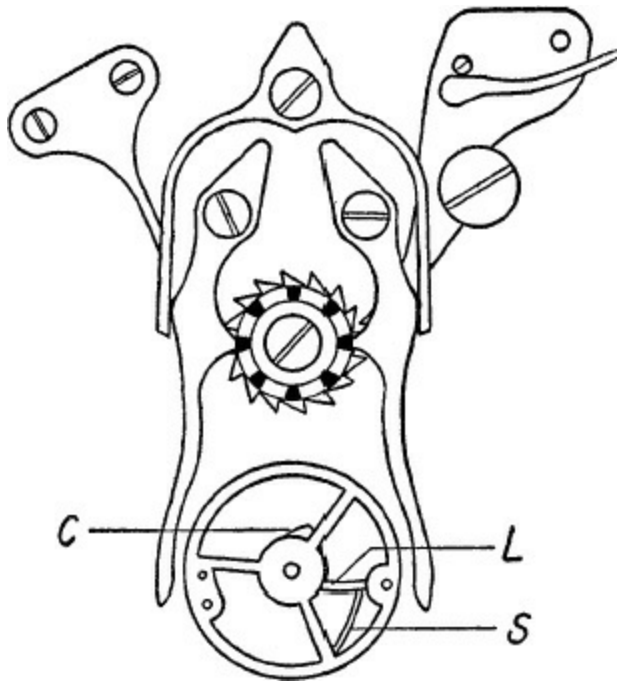

Figure 60.

ACTION OF THE SPLIT-SECOND CHRONOGRAPH

Now pressing the brake levers button, the brake levers close in on the split-second wheel and its motion ceases. The chronograph runner and its cam continue to rotate and the roller is forced outward from its lowest point on the cam, but clings to its circumference because of the tension spring. Thus the roller lever moves out and in until the brake levers button is again pressed. Upon the release of the brake levers, the roller again seeks the lowest point on the heart cam and the split-second hand returns instantly to its proper place directly underneath the chronograph hand.

Venus Chronograph

Construction. The Venus chronograph, Figure 61, is one of the newest models and, in keeping with present day trends, is designed without pillar wheel. The operation is on the conventional pattern, that is, two presses on

button number *1* start and stop the recording hands. Button number *2* is used to return the hands to zero.

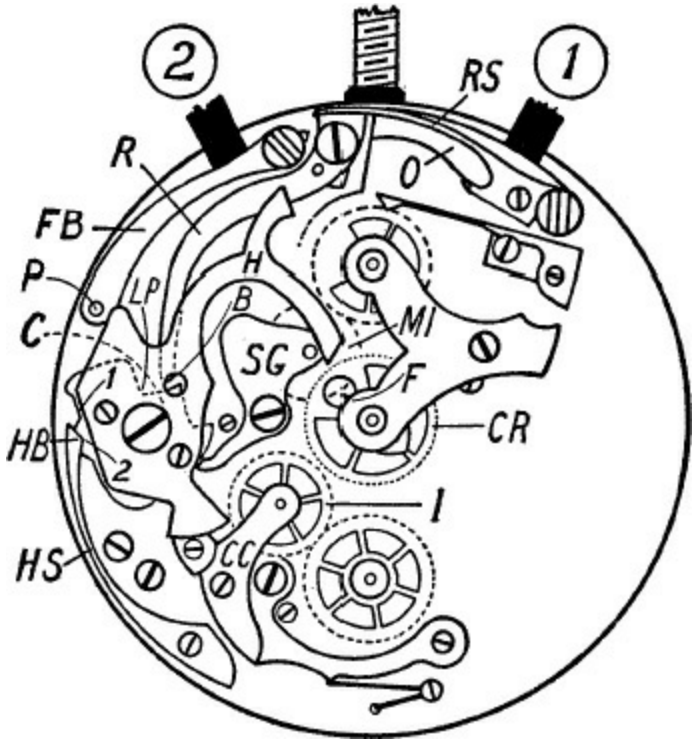

Figure 61.

The *reverser R* is held to a fixed position by the *reverser spring RS*. Successive presses of button number *1* causes the *cam C* through the *operation lever O* and reverser *R* to oscillate first counterclockwise, then clockwise. The cam *C* and the *hammer H* are fastened together by two screws and turn together as one functional unit. The *hammer spring HS* assists in restricting the motion of the hammer by way of its *beak HB* dropping into the notches *1* and *2*. The hammer cannot turn clockwise farther than notch *2* by means of button number *1* as the downward movement of the reverser is restricted to just this distance. However, when the button number *2* is pressed, the hammer swings clockwise to the extent that the faces of the hammer impinge the heart pieces and the recording hands are returned to zero. The force of the hammer spring returns the hammer to the position shown in the illustration immediately upon releasing pressure on button number *2*.

ACTION OF THE VENUS CHRONOGRAPH

Starting function. Pressing button number *1* the *operating lever O* comes into action and forces the *reverser* downward. As the reverser moves downward it also moves to the left until the *beak B* reaches the lowest point *LP* on the *cam C.* As the movement of the reverser continues, the *hammer H* is turned counterclockwise thus releasing the coupling clutch *CC.* The *intermediate wheel I* engages the *chronograph runner CR* and the seconds recording hand is started. Simultaneously the motion of the cam permits the *sliding gear SG* to turn clockwise so as to cause the minutes recording mechanism to start functioning through contact of *finger F* with the *intermediate wheel ML*

Stopping function. Pressing button number *1 a* second time causes the hammer to turn clockwise since the beak of the reverser now drops to the right side of the cam. The *hammer spring HS* drops into *notch* 2 on the cam *C.* Thus the coupling clutch is lifted and the seconds recording hand is stopped. Simultaneously the sliding gear is lifted and the minutes recording mechanism is thrown out of action.

Hands to zero function. The hands are returned **to zero** by pressing button number *2* which, in turn, actuates the *fly-back lever FB.* The *pin P* on the fly-back lever presses on the hammer which swings to the heart pieces. Thus the recording hands are returned to zero.

Pierce Chronograph

Construction. The principles of operation of the Pierce chronograph are different from all other makes and for this reason some of the customary terminology does not apply. It will be observed, Figure 62, that the equivalent of a coupling clutch consists of two levers, *starting lever SL,* and *starting spring SS.* Instead of the traditional center wheel, the mechanism is fitted with a hollow *center seconds wheel* and is not shown in the illustration. Lying above the center seconds wheel is a *seconds runner SR* with *heart piece* and *finger F*. By means of the starting spring SS the seconds runner is forced downward to engage the center seconds wheel. In this manner the recording hands are started. The radical departure from the usual design is seen in the direction that the functional parts move. In all mechanisms previously considered the movement of the parts is horizontal whereas in the Pierce the motion is vertical.

However, the return of the recording hands to zero is similar to the conventional type. Even here, there is a difference in that the brakes are not actuated by the *hammer H.* Instead the *brakes* B^1 and B^2 friction constantly except when the recording hands are recording time. This is made possible since the friction of the brakes is light enough as to not hinder the proper returning of the recording hands to zero.

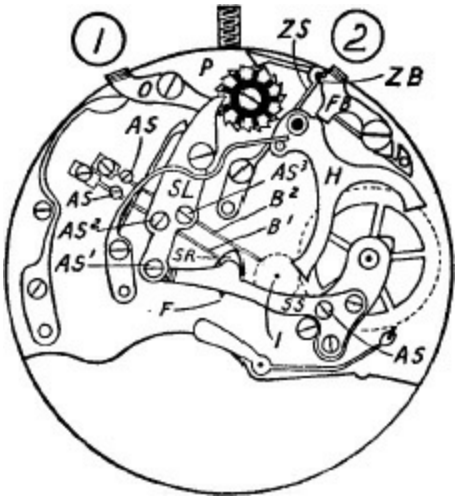

Figure 62.

The finger *F*, that functions the minutes recording assembly, is raised above the intermediate wheel *I* when the recording hands are stopped. This permits the return of the recording hands to zero without any interference between the finger and the intermediate wheel.

The Pierce chronograph is well supplied with adjusting screws to properly co-ordinate the several functions. These are shown in the illustrations by the letters *AS.*

ACTION OF THE PIERCE CHRONOGRAPH

Starting function. Pressing button number *1* actuates the *operating lever* O and the *pillar wheel P* is turned. This movement raises the beak of the starting lever *SL* from its position between two pillars of the pillar wheel thereby causing the beak to rest on the face of one of the pillars. As a result of the above movement of the starting lever to its new position, three springs are actuated through the *adjusting screws* AS^1, AS^2, and AS^3. The movement of the three springs take place simultaneously but we shall analyze the functions separately as follows.

Adjusting screw AS^1 presses downward on the *starting spring SS* which in turn presses on the *seconds runner SR* and the seconds recording hand is started. The recording hand is started because the seconds runner, in its downward movement, engages the center seconds wheel, not shown, which runs continuously.

Adjusting screw AS^2 presses on the *seconds runner brake* B^2 and releases the seconds runner.

Adjusting screw AS^3 presses on the *minutes recorder brake* B^2 and, through its separation from the intermediate wheel *I*, releases the minutes recording mechanism.

Stopping function. Pressing button number *1* a second time returns the starting lever *SL* and the starting spring *SS* to their original positions permitting the seconds runner *SR* to separate from the center seconds wheel. Immediately the recording hand stops. Simultaneously the two brakes B^1 and B^2 come into action and the seconds runner *SR* and the intermediate wheel *I* are held in position.

Hands to zero function. The recording hands are returned to zero by pressing button number *2* which actuates the *fly-back lever FB.* The fly-back lever in turn presses on the hammer *H.* To give a little zip to the motion of the hammer, the spring *ZS* is fitted and the end engages the beak *ZB.* This spring resists the motion of the hammer when pressure is applied to the button, and is just enough to cause the hammer to fly quickly after the beak passes the end of the spring.

PART II

Chapter Nine

CALENDAR MECHANISMS

CALENDAR attachments to wrist watches and clocks have become quite popular in recent years. The idea is not new but the design of the mechanism has shown steady improvement. Figure 63 shows the calendar mechanism typical of the design generally used in men's wrist watches. The star wheel, *12*. lies in the upper right part of the dial and indicates the months. It has 12 points, one for each month, and is corrected manually the first of each month by pressing a button on the case which, in turn, actuates the lever *MC*.

The star wheel *7* lies in the upper left part of the dial and indicates the days of the week. The wheel contains 7 points and makes one turn in 7 days. It must be tripped once in 24 hours and the wheel that does the tripping must, if one tripper is provided, make one turn in 24 hours. This is attained in the following manner:

The hour wheel, not shown, carries two wheels. The larger wheel is driven by the minute pinion — in fact, it is the same wheel as found in the dial train of the conventional watch without the calendar attachment. The smaller wheel lies above the larger and drives the *date wheel, D*. The date wheel has twice the number of teeth as the smaller wheel on the hour wheel. Thus the date wheel makes one turn in 24 hours. The date wheel *D* gears with the intermediate wheel *I*. The intermediate wheel carries the pin *P* which trips the star wheel, *7*, each night after 12 p.m.

Figure 63.

The *date hand wheel, 31,* fits freely over the hour wheel and carries a sweep hand for indicating the days of the month. The wheel contains 31 teeth and makes one turn in 31 days. The pin *DP* trips the date hand wheel at approximately the same time as the pin *P* trips the star wheel, 7 — that is, if the wheels *D* and *I* are correctly timed. The *timing dot, TD,* on the date wheel is provided for this purpose. Pin *P* and the dot *TD* should lie on the line of centers when the two wheels are assembled.

The moon phase disc, *59,* is turned by a train of two wheels. The small wheel on the hour wheel turns the wheel *M,* which, like the date wheel, makes one turn in 24 hours. The pin *MP* trips the moon phase disc each day at noon. The moon disc is supplied with 59 points and makes one turn in 59 days. One moon phase contains 29½ days, hence the necessity of using a wheel of 59 points. This explains why two moons are painted on the disc.

All calendar records are set by small push pieces on the side of the case except the days of the week, which can be corrected only by turning the hands. To make certain that the star wheels move the required distance, jumpers are provided.

Figure 64 shows a calendar watch wherein the month is recorded automatically. This feature is made possible by fitting an extra wheel *M*

containing 31 teeth. One point on this wheel trips the star wheel, *12*, once every 31 days. Thus the months are recorded, but the short months, of course, require resetting.

Figure 64.

Notes on Repairing Complicated Watches

Throughout the pages of this book we have attempted to analyze the essentials of clock and watch repairing; to explain the function of the more general and frequently handled mechanisms of striking clocks, automatic watches, stop watches, and chronographs.

However, as the horologist's work continues, the unusual, the very old, and the very new in timekeeping instruments occasionally come into the shop for service and repair. Obviously, the beginner feels uneasy in tackling these jobs that are often more complicated than the general run of repairs. We shall give **a** few hints below on how to best handle these watches.

Routine to follow in cleaning unfamiliar and complicated timepieces. If the horologist does not already have one, he should purchase that type of movement cover that comes equipped with a tray for watch parts that is divided into sections. Then, as the movement in question is dismantled, the

parts of one complete functional assembly are placed in one of the sections of the tray. This method aids one's memory as to the manner and order in reassembling the separate units.

It is a good plan, too, to start working on a complicated timepiece in the morning so that the job may be finished before the day's work is over. For a beginner, at least, the idea of starting a complicated watch of unfamiliar construction late in the afternoon and finishing the job the next day, results in a failure to remember the proper place and order of assembly of the functional units.

Another point should be observed. Complicated watches have a great variety of screws of many kinds, shapes and sizes. When there is any doubt as to where a particular screw is to go later after cleaning and repairing, replace the screw in the plate or bridge immediately after the part is removed. This practice will be found to save time.

For beginners, in particular, the dismantling of the movement should be done with deliberation and concentration. Think with undivided attention on each and every part removed. Using a specific example, the beginner says to himself, "I am now removing the bridge that holds the chronograph wheel and minutes runner in place. Removal of the hammer comes next, and now the chronograph wheel and minutes runner can be lifted out. In reassembling these parts the order is reversed." It is surprising how much this manner of concentrating aids the memory.

PART III

THEORETICAL HOROLOGY

PART III

Chapter One

A STUDY OF THE PENDULUM

THE PENDULUM is today and has been for three hundred years the most important piece of clockwork. It is practically a precision instrument for the measurement of time. By means of a weight or mainspring, a train of wheels and an escapement, its vibratory motion, which friction and resistance of the air tend to destroy, is sustained.

The history of the pendulum had its beginning with Galileo Galilei (1564-1642), when he observed the swinging chandelier in the cathedral of Pisa about the year 1581. Later he conceived an escapement to keep the pendulum in motion and made a drawing of it. It remained for his son, Vincenzio Galilei, to make a working model, and a copy of the original in running condition is to be seen at the Kensington Museum, in London. However, Christian Huyghens (1629-1695) was probably the first to apply the pendulum in a practical way to clocks. His first pendulum clock was produced in 1647.

In order to discuss the theory of the pendulum with any degree of clearness, it is desirable to digress for a moment and consider some of the factors concerning the earth upon which we live, for it so happens that the rotation of the earth upon its axis, the nature of gravitation, and other physical phenomena have a direct relationship to the observed performance of the pendulum, and these facts must be kept in mind.

Universal Forces

Gravitation. All bodies fall perpendicularly with reference to the surface of still water or, in other words, they fall vertically, which is, of course, toward the center of the earth. The fall of a body also increases in velocity through the distance covered, as shown in Table 1.

TABLE 1

Duration of fall	*Distance covered*	*Velocity per second*
1 sec.	16 ft.	32 ft. sec. after 1 sec.
2 "	64 "	64 " " " 2 "
3 "	144 "	96 " " " 3 "
4 "	256 "	128 " " " 4 "
5 "	400 "	256 " " " 5 "

The above table shows that in two seconds a body falls four times as far as it falls in the first second. In three seconds a body falls nine times as far and in four seconds, sixteen times as far. Thus, we may say that the distance which a body falls is proportional to the square of the time.

Newton's law of universal gravitation.* Sir Isaac Newton (1642-1727) discovered certain facts about gravity and we state herewith Newton's Law:

---

* Newton's system of mechanics as explained above is valid for the pendulum and other large scale phenomena of nature. However, the theory of relativity has shown that beyond these lie a system of atomic and subatomic processes which do not obey Newton's laws at all. See H. Horton Sheldon, *Space, Time and Relativity*, The University Society, New York.

All bodies in the universe attract every other body with a force which is directly proportional to the product of the attracting masses and inversely proportional to the square of the distance between their centers.

The above statement of the law may be clarified by elaborating on it as follows:

Gravity acts between bodies, and the attraction is proportional to the mass — that is, a larger mass carries with it an equally increased pull of gravity. This was demonstrated by Galilei, when he was professor of physics at the University of Pisa, by dropping large and small iron balls from the leaning tower of Pisa. They reached the ground at the same time. This demonstration astonished and bewildered a number of professors who saw it, for it was believed prior to that time that heavy bodies fell faster than light bodies.

Later, by the invention of the air pump for producing a vacuum, this statement by Galilei was verified by demonstrating that heavy and light bodies such as a coin and a feather would fall together in a glass tube where they would not encounter the friction of the air. After the air is again admitted, the feather flutters slowly behind the rapidly falling coin.

Newton further proved that gravity is the same as though the entire mass of the body was concentrated at its center. Hence, in considering the attraction of the earth for any body upon its surface, the distance indicated in the law is the earth's radius plus the distance to the center of gravity of the body.

The law goes on to state that the attraction of the masses is inversely proportional to the square of the distance between their centers. For example, let us suppose that a body were removed twice as far from the earth's center and allowed to fall. It would fall only one-fourth as fast. If removed three, four, or five times as far from the earth's center, the body would fall one-ninth, one-sixteenth, or one-twenty-fifth as fast.

Hence, an iron ball would fall faster when dropped at an altitude of sea level than an iron ball dropped on a mountain 7000 feet above sea level. This fact can be proved when counting the vibrations of a pendulum placed at different altitudes.

Centrifugal force. Tie a string to a stone and whirl it around rapidly. The string will stretch tighter and tighter. Increase the speed and there is a possibility that the string will break. If so, the stone will fly away at a tangent.

This thrust is known as centrifugal force and tends to distort a sphere rotating on its axis. In fact, this earth of ours bulges at the equator and is flattened at the poles due to the very same cause, for the earth is sufficiently pliable to be so formed. As a result of this bulging of the land and water about the equator, the earth is 26.7 miles shorter between the poles than through the equator.

Centrifugal force is greatest at the equator and decreases with each parallel of latitude toward the poles. At the poles it is zero and the weight of all bodies is accordingly affected.

Summary. Our discussion has made clear three important factors: (1) The velocity of a falling body is the same regardless of its mass. (2) Weight is determined by the location of a body at different altitudes, being less at higher altitudes and increasing as the body is moved to lower altitudes. (3) Centrifugal force tends to lessen the weight of bodies when the force is increased as by moving a body from the smaller parallels of latitude to the larger. At the poles it is zero. The maximum is reached at the equator.

The Pendulum

Definitions. Now, returning to the study of the pendulum proper, we shall see how the earth's motion and gravitation affect the performance of the pendulum. It is desirable, however, first to consider several definitions relative to the subject.

Pendulum: Any suspended body that swings to and fro.

Bob: The mass of metal at the bottom of the pendulum.

Simple pendulum: A heavy bob suspended by a slender thread. Theoretically a simple pendulum is a heavy particle having no appreciable size and suspended by a line without weight.

Compound pendulum: Any pendulum having a portion of its mass elsewhere than in a compact bob. All clock pendulums are compound pendulums.

Center of suspension: The fixed support of **a** pendulum.

Center of oscillation: A point in the bob in which, if all **the** matter composing the bob were collected into it, the time of vibration would not be affected.

Vibration: One complete swing of the pendulum.

Period: Time occupied in making a vibration.

Amplitude: The angle between the verticle and the end of a vibration. Angle *AOB* (Figure 1) is the amplitude.

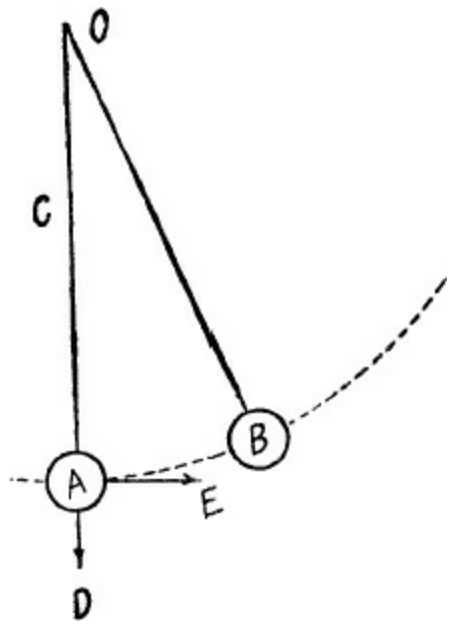

Figure 1.

MOTION OP THE PENDULUM

We know that a simple pendulum is in equilibrium when the thread which supports the bob is vertical. However if we pull the pendulum to an inclined position and let it go, it will descend to regain its original position and its own momentum will cause it to raise nearly as far on the other side.

The gravity that acts on the bob when in motion is a vertical force which may be separated into two parts: The first part acts with the prolongation of the thread as at *D*, Figure 1. This force is destroyed because of the thread *C* which supports the bob. The second acts in a direction perpendicular to the first, as at *E*, and manifests all its force through the vertical attraction of gravity on the bob, thus forcing the bob along the line *AB.* The bob will move as far as the vertical position with an accelerated movement but not consistently so as with a falling body, for the gravitational force along the circular path is continually diminishing and it ceases altogether when the bob reaches the vertical. On regaining its vertical position the pendulum will raise on the other side because of its acquired momentum, although the effect of gravity which attracted the bob in its downward movement is rendered void. Gravity will now act as a retarding force and the velocity will be lessened. It will, however, raise to nearly the same height that it left on the other side and then return, executing another vibration like the first.

A simple pendulum will vibrate for all time if friction and resistance of

the air could be completely eliminated but, of course, this cannot be in practice.

THE FOUR LAWS OF THE PENDULUM

The following are the laws governing the motion of the pendulum as would be suggested from the material given in the preceding pages.

First law. *The vibrations of the pendulum are practically isochronal — that is, they are executed in nearly the same time for varied amplitudes so long as these amplitudes remain small.*

The pendulum formula, which will be considered a little later, assumes that the pendulum vibrations are isochronal. In practice we do not find it so and the error consists of a loss for the long arcs. This is known as the circular error and a more thorough analysis will be given in a later portion of this chapter.

Second law. *The period of the pendulum is independent of the mass and also of the material.*

As previously stated, falling bodies of varying masses are equally accelerated. In other words the force of gravity acting on the bob is proportional to its mass, which means, simply, that altering the weight of a pendulum does not change the time of vibration, so long as the center of oscillation is not changed.

However, if we place a small weight above the pendulum bob, the clock will run faster, for the center of oscillation has been raised and the pendulum has, in fact, been shortened.

Third law. *The period of a pendulum is proportional to the square root of its length.*

We have learned that gravity is a constant force which is required to act through four times the distance to impart twice the velocity to a body. Therefore a pendulum that is to vibrate twice as fast as another must follow a path four times as steep, and to realize this condition, it must be one-fourth as long. Stated in mathematical language, we have:
$t = \sqrt{l}$ in which t equals the time of one vibration and l the length.

Fourth law. *The period of a pendulum is inversely proportional to the square root of the acceleration of a falling body.*

When a pendulum is taken from one location to another in which the force of gravity is different, its rate is affected in the same manner as that of a falling body and for the same reason. The effect, as stated in the law, would be such that if gravity has four, nine, or sixteen times more intensity, the pendulum will vibrate two, three, or four times faster. Hence, a pendulum clock regulated to keep correct time at the equator would run fast at the north pole. In fact the length of a seconds pendulum for points on the earth's surface would be as in Table 2.

TABLE 2

At the equator	39	inches
40 degrees latitude	39.1	"
70 " "	39.2	"
At the poles	39.203	"

These figures are for sea level. For the higher altitudes the pendulum would be shortened slightly to register correct time.

THE PENDULUM FORMULA

The laws stated above are expressed in the following formula:

$$t = \pi \sqrt{\frac{l}{g}}$$

in which t = the time of one vibration (period)
π = 3.1416 which is the relation of the circumference to the diameter
l = the length of the pendulum
g = the acceleration of gravity

By means of this formula we may determine: (1) the length of a pendulum for a given period; (2) the period for a given length of the pendulum; and (3) the acceleration of gravity for any point on the earth's surface where its value is not known. Horologists are, of course, interested only in the first two principles and the third shall not be considered further.

Illustrative example 1. What is the length of a seconds pendulum if the acceleration of gravity is given as 32.1 feet (385.2 inches) per second?

$$t = \pi\sqrt{\frac{l}{g}}$$

$$1 = 3.14\sqrt{\frac{l}{385.2}}$$

$$1^2 = \frac{9.865l}{385.2}$$

$$\frac{9.856l}{385.2} = 1^2 \text{ or } 1$$

$$l = \frac{1 \times 385.2}{9.865}$$

$$l = 39.1$$

Illustrative example 2. What is the period of a pendulum 9.75 inches long?

$$t = 3.14\sqrt{\frac{9.75}{385.2}}$$

$$t^2 = \frac{9.85 \times 9.75}{385.2}$$

$$t^2 = .25$$

$$t = .5 \text{ or } \tfrac{1}{2} \text{ second}$$

Solution of pendulum problems by proportion. The solution of the above problems may be simplified by noting that the third law of the pendulum, mathematically expressed, is as follows:

$$t = \sqrt{l}$$

Squaring we have

$$t^2 = l$$

Thus we may consider two pendulums of different periods and their relative lengths by the proportion:

$$t^2 : l :: t_2^2 : l_2$$

It follows that the length or period of any pendulum can be determined if the length of a seconds pendulum is known.

Illustrative example 1. What is the length of a pendulum vibrating 1/3 seconds?

$$1^2 : 39 :: (\tfrac{1}{3})^2 : l$$
$$\tfrac{1}{39} = \frac{(\tfrac{1}{3})^2}{l}$$
$$l = \tfrac{1}{9} \times 39$$
$$l = 4\tfrac{1}{3} \text{ inches}$$

Illustrative example 2. What is the period of a pendulum 156 inches long?

$$1^2 : 39 :: t^2 : 156$$
$$\tfrac{1}{39} = \frac{t^2}{156}$$
$$\frac{156}{39} = t^2$$
$$t^2 = \frac{156}{39} = 4$$
$$t = 2 \text{ seconds}$$

Detrimental Forces

There are several forces that alter the uniform swing of the pendulum. Some forces can be quite accurately controlled, but others cannot. The more important errors are listed as follows:

Escapement error	Circular error
Barometric error	Temperature error

These will now be discussed in the order named above.

ESCAPEMENT ERROR

The pendulum of a clock must have some sort of a mechanical device to keep it in motion. This mechanism is called an *escapement.* It is a device that periodically pushes the pendulum, but the nature of this push is such that certain conditions are introduced that affect the timekeeping.

The impulse delivered to the pendulum through the escapement should take place at the moment when the pendulum reaches the dead point, that is, when the pendulum is vertical. This ideal condition would permit the pendulum to swing to and fro in the same time that a free pendulum performs these swings. However, the mechanical means at our disposal to keep the

pendulum vibrating do not meet the above requirements and we are obliged to take account of the following laws:

1. *An impulse delivered to a pendulum before the dead point will accelerate the vibrations.*

2. *An impulse delivered to a pendulum after the dead point will retard the vibrations.*

This principle can be easily demonstrated with a simple pendulum. Impulse given to a pendulum before it reaches the dead point causes it to arrive at the dead point more quickly than if it were acted upon by gravity alone. Given impulse after reaching the dead point results in driving the pendulum farther, resisting the force of gravity and at no particularly accelerated rate, if any. Hence a retardation takes place, and the greater the distance the impulse takes place after the dead point, the greater is the retardation.

Some escapements give impulse after the dead point, others at the beginning of a vibration, and the rate differs accordingly.

BAROMETRIC ERROR

A swinging pendulum fans the air and creates a breeze in its wake much like that of a rapidly moving train. But much more happens than the mere disturbance of the air, and to clarify the subject it will be necessary first to explain some of the phenomena relative to the atmosphere proper.

Atmospheric pressure. Air, like all gases, is made up of untold millions of molecules. These molecules move about freely and at a terrific speed. Their constant motion produces a pressure of great magnitude and the higher the temperature the faster is the motion and the greater is the pressure.

Atmospheric pressure is fifteen pounds to a square inch, or about one ton to a square foot. This pressure takes place in every direction, as can be shown by partially filling a glass with water and carefully fitting a smooth cardboard to the mouth of the glass. Inverting the glass, the cardboard will not fall and the water is seemingly supported by the cardboard. It is apparent that there is present an upward force that is equal to the downward force of the water, in fact, the glass may be tilted in a horizontal position and the result will be the same. This shows that the pressure of air takes place in every direction.

Weight of air. Since air is a real substance occupying space, it must have

weight. This can be demonstrated by the simple experiment with an ordinary balance. Determine the weight of an open glass flask with stopper. Remove some of the air from the flask and weigh again. The flask will now show less weight and the actual weight of the air removed is found by finding the difference between the first and second readings of the balance. Experiments have shown that a cubic foot of air weighs about 1¼ ounces and the air in an average living room weighs about 500 pounds.

The above analysis of atmosphere would leave no doubt that the swing of the pendulum would be affected. If the weight and pressure of the air were constant, these factors would be of little concern to horologists, but since they are variable, the pendulum arcs vary also. Atmosphere affects the pendulum by way of three forces:

1. Inertia of the air
2. Friction of the air
3. Weight of the pendulum

Inertia of the air. When a pendulum starts on its downward swing, it must, of necessity, push the air, but as the inertia of the air is overcome, the air travels along with the pendulum. If the resistance of the air before and after the dead point were equal, the time of vibration would not be altered. It can be shown, however, that the resistance of the air is greater as the pendulum approaches the dead point and less after it passes the dead point. This is clear when one realizes that the downward swing of the pendulum is constantly being accelerated and consequently has to push the air all the way to the dead point. In its upward swing, the pendulum is retarded by gravity and from that point on, the air just about keeps up with the pendulum. Thus the inertia of the air tends to prolong the time of the downward swing and also extends the time of the upward swing. The total result is a loss in time, and with a rising temperature (high barometer) and its associated increase in air pressure, the loss becomes still greater.

Friction of the air. The friction of the air on the pendulum leads us to a discussion of the best shape for the bob. Tower and precision clocks usually use the cylindrical bob. Most others use the lense-shaped bob. The cylindrical bob is subject to more air resistance than the lense-shaped bob, yet the latter meets with more surface friction. The more detrimental force is the air resistance, particularly if the pendulum is enclosed in a case. It is a simple

matter to demonstrate this by making two bobs of equal mass and material, one cylindrical and one lense-shaped. By causing them to vibrate without an escapement, we may observe in which bob the arc of vibration falls off more quickly. The lense-shaped bob swings longer, which also implies that it would take less power through the escapement to keep it swinging. Aside from taking a small load off the escapement, there seems to be no advantage in the lense-shaped bob.

Weight of the pendulum. We have just learned that air, like all substances, has weight, and because of this, all masses heavier than air tend to be buoyed up. Every swimmer has observed that it takes less effort to lift a heavy stone at the bottom of a swimming pool than to lift the same stone above ground.

The effect is similar with the pendulum in air, for with a denser atmosphere, the apparent weight or pull of gravity on the bob is reduced and the clock tends to run slower.

This loss of gravitational pull due to buoyancy varies with the metal used for the bob. It is greatest with iron and the least with lead. Brass lies midway between.

The only practical solution to the barometric problem in precision clocks is partially to remove the air from the pendulum chamber and maintain a constant temperature. For domestic clocks the error is too small to be of any concern.

CIRCULAR ERROR

Christian Huyghens, who built the first pendulum clock in 1657, made a discovery that horologists to this day have not solved. He observed that the pendulum is not isochronous and that the long arcs lose and the short arcs gain. Also the change of rate is not uniform to the change of arc. Instead, the loss increases more rapidly as the arcs become consistently longer. Huyghens called the error the *circular error* and the change of rate for different amplitudes is shown in Table 3.

TABLE 3

Semi-Arc	*Seconds per day*
30’	.41

1° 00’	1.65
1° 30’	3.7
2° 00’	6.6
2° 30’	10.3
3° 00’	14.8

The circular error was a real problem in Huyghens’ clock, for the verge escapement of his day vibrated with exceedingly long arcs. Huyghens developed a theoretical solution but it has never been given a practical application. Theoretically the problem is simple, for all the pendulum ball has to do is to follow the path of a cycloid as shown in Figure 2. The dotted line shows the path of the pendulum ball. The solid line *BC* shows the path of the cycloid. To make the cycloidal curve, fit a pencil point to a point on the circumference of the circle *GS* (the generating circle), and roll it along the line *DE*, without slipping. The curve *BC* is thus formed. The diameter of the generating circle is half the length of the pendulum *OA*, It is at once evident that the steeper sides of the cycloidal path would give the pendulum added impulse that would make the long and short vibrations isochronous.*

*The cause of the circular error may be better understood if we will visualize a pendulum, the length of which is equal to the radius of the earth. For such a pendulum the lines of gravity diverge from the center of the earth as shown in *Figure 2B*. The earth’s gravity would pull the pendulum back to the vertical position with much greater force, especially near the ends of the arcs, than is possible when the gravitational force is downward as is the case with the short (clock length) pendulum. This is clearly seen when comparing *Figure 2B*, which represents a pendulum 3,959 miles long (earth’s radius), and *Figure 2C* which shows a pendulum 39 inches long. It is our opinion that a pendulum extending 3,959 miles would eliminate the circular error but this is theoretical fantasy and cannot be demonstrated.

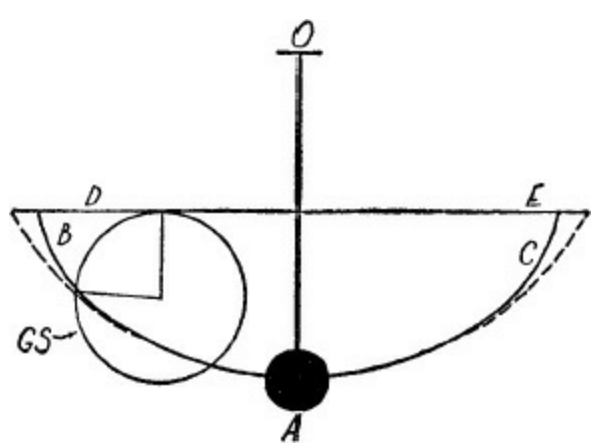

Figure 2A.

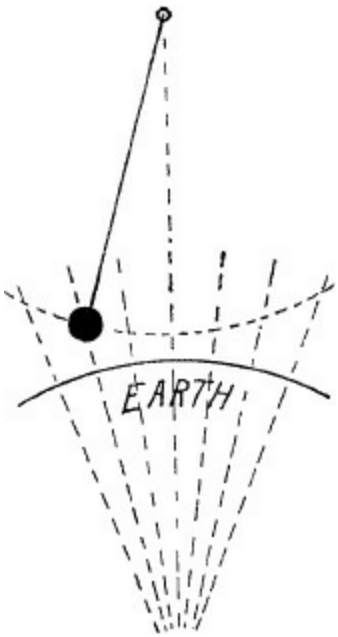

Figure 2b.

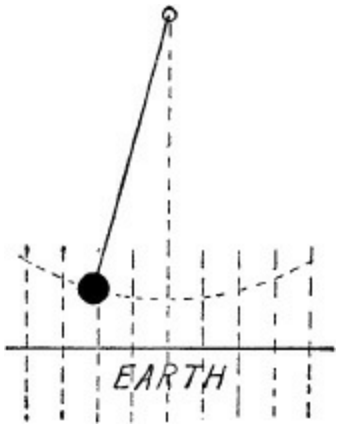

Figure 2c.

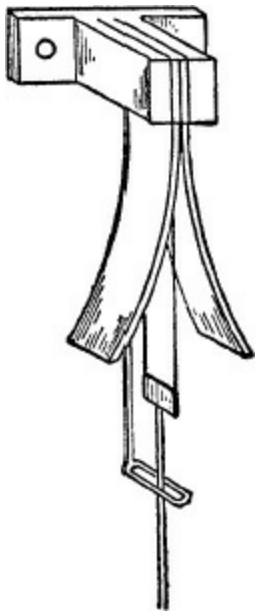

Figure 3.

Huyghens conceived the idea of using cycloidal cheeks as shown in Figure 3. The pendulum rod was suspended by two small cords and when these contacted the cheeks, the pendulum ball was forced to follow the path of a cycloid. Huyghens' pendulum has never been used with modern escapements because of mechanical difficulties. Other errors were introduced that were more detrimental than the one the device was intended to correct. Modern clocks, too, have an escapement whereby the pendulum arc is materially reduced and this, of course, reduces the circular error. If a constant pendulum arc could be maintained, the circular error would be no problem; however the deterioration of the oil tends to shorten the pendulum arc and the circular error becomes manifest.

TEMPERATURE ERROR

Most materials of which pendulums are made expand in heat and contract in cold. Therefore a clock *without* some sort of temperature compensation will run *fast* in winter and *slow* in summer. In fact, a clock beating seconds and fitted with a brass pendulum rod will lose as much as 1 minute in 24 hours if the temperature is increased 100 degrees. We list herewith the coefficients of expansion of various materials generally used in clock-making. The figures indicate a change of 180 degrees, Fahrenheit — that is, from 32 degrees to 212 degrees.

Lead.....0028	Steel.....0011
Zinc.....0028	Wood.....0004
Brass.....0020	Invar.....00009

It will be noted that Invar has the least expansion. Wood follows with slightly more, while lead and zinc stand relatively high. Mercury has been found to be an excellent compensating medium for pendulums with steel rods.

Theory of temperature compensation. The theory of compensated pendulums is simply that the center of gravity of the bob is raised or lowered to an amount equal to the lengthening or shortening of the pendulum rod. This is realized by placing the regulating nut at the bottom of the bob.

Suppose, for example, a pendulum rod of wood lowers the regulating nut a given amount with a given rise in temperature. The bob is of lead and, since lead expands eight times to that of wood, the diameter of the bob is one-fourth the length of the pendulum rod. The result is a fixed distance from the center of gravity of the bob to the point of suspension for all temperatures.

Wood and lead pendulums are suitable for popular-priced regulators, grandfather clocks, and domestic clocks generally, but are not considered sufficiently accurate for precision clocks.

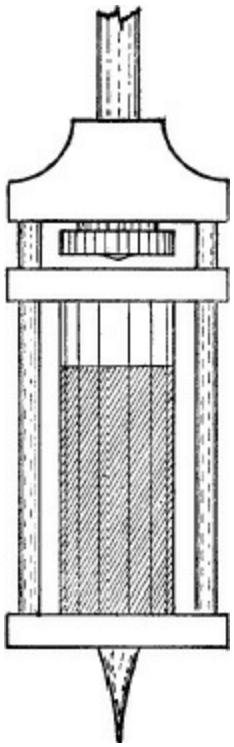

Figure 4. Graham's mercury pendulum.

Graham's mercury pendulum. George Graham invented the mercury pendulum in about 1715 and it was probably the first successful attempt at temperature compensation with any degree of precision. His pendulum consisted of a steel rod and a single jar of mercury as shown in Figure 4. Two jars are sometimes used, with the advantage that the mercury responds to temperature fluctuations more quickly.

Mercury is an excellent compensating material, since it is liquid and can be removed from or added to the pendulum to attain perfect compensation. For example: if the clock loses in heat, the pendulum is said to be undercompensated and more mercury is added.

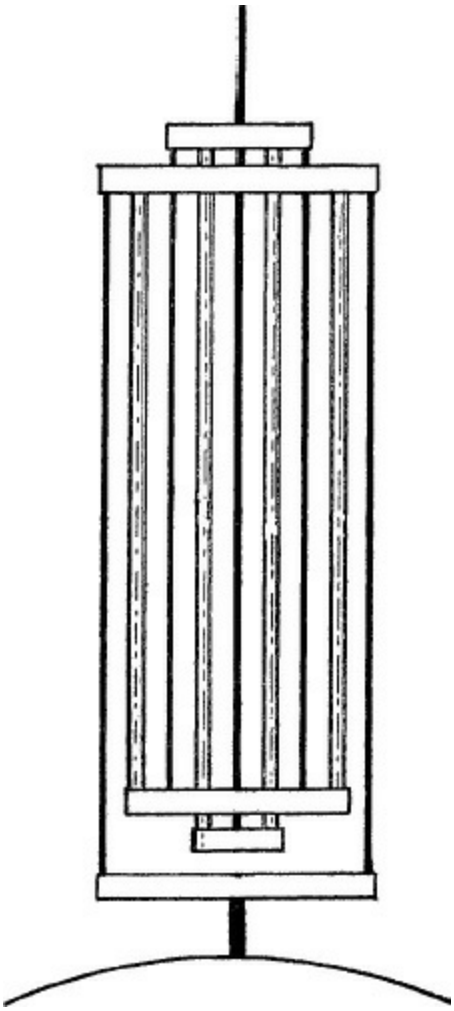

Figure 5. Harrison's gridiron pendulum.

Harrison's gridiron pendulum. This pendulum, invented by John Harrison in 1720, consists usually of nine parallel rods. The downward expansion of the steel rods is compensated by the upward expansion of the brass rods. The construction is as follows: Referring to Figure 5, the center steel rod extends to the lower part of the pendulum, where it is secured to a horizontal bar. This same bar supports two brass rods that lead to the top. These brass rods, in turn, are secured to another horizontal bar that carries two steel rods to the bottom, etc. The two outermost steel rods support the bob. Thus, the five downward expanding steel rods and four upward expanding brass rods are of such proportions that the pendulum will be compensated.

A few clocks with Harrison gridiron pendulums may still be seen in jewelry store windows, but this pendulum is now regarded as obsolete.

Zinc tube pendulum. The gridiron pendulum, with its numerous steel and brass rods, makes a rather cumbersome pendulum. A simpler construction is realized by substituting zinc for the brass. Since the expansion of zinc is greater than brass, one zinc tube for the upward expansion is all that is necessary. The construction is as follows: The regulating nut at the bottom of the central steel rod supports a zinc tube that is just large enough to slip over the steel rod. Surrounding the zinc tube is a steel tube secured to the zinc tube at the top of the pendulum. The outer steel tube supports a lead bob at the bottom. Figure 6 shows the zinc tube pendulum. Note that the steel tube reaches only to the middle of the lead bob. This is the type generally used in tower clocks.

Invar pendulums. Pendulum rods made of Invar, an alloy of 64 parts steel and 36 parts nickle, have a curious property of little or no expansion. In fact, some specimens of the material have been known to expand in cold and contract in heat. Invar, coined from the words "elasticity invariable," is the result of years of research by Dr. Charles E. Guillaume, late director of the International Bureau of Weights and Measures at Serves. The difficulties in the making of Invar are such that no two batches are exactly alike and each pendulum calls for individual experimental compensation.

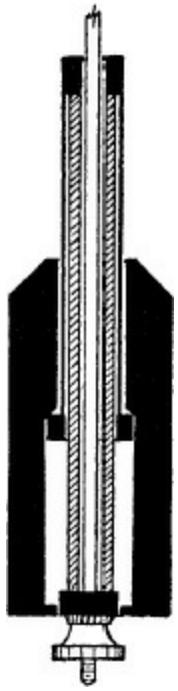

Figure 6. Zinc tube pendulum.

The bob for an Invar pendulum is usually a steel cylinder (Figure 7), drilled lengthwise to admit the Invar rod. From the bottom to the center, the bore is larger so as to permit a space for a brass or steel pipe called the *compensator*, which provides the upward expansion, if necessary. The regulating nut lies below the compensator and is screwed on a threaded portion of the Invar rod. In making an Invar pendulum, the compensator is left a little long. Testing the clock in cold and heat, the compensator is shortened until the correct length has been determined.

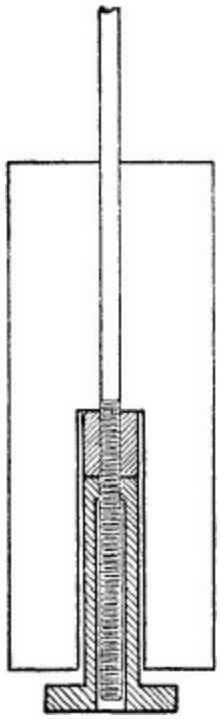

Figure 7. Invar pendulum.

Invar pendulums are used today in the finest astronomical and precision clocks.

PART III

Chapter Two

A STUDY OF THE BALANCE AND BALANCE SPRING

THE CIRCULAR balance is used in watches, portable clocks, and chronometers. The earliest watch balance was the *foliot*, similar to the clock foliot described on page 136. The motion of the foliot was controlled by a pig's bristle in the manner shown in Figure 8.

In the year 1660, Dr. Robert Hooke invented the balance spring, which completely revolutionized the science of horology. This achievement paved the way to the development of the chronometer, which became an instrument of precision as early as 1750.

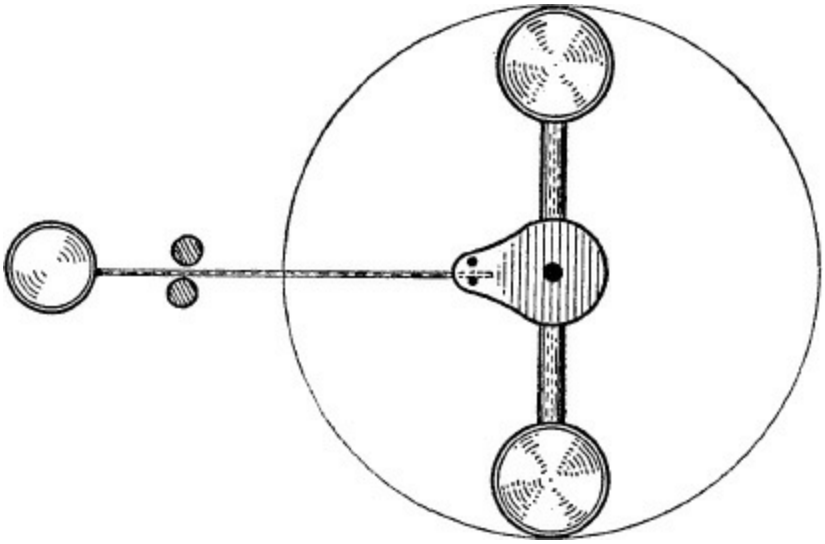

Figure 8. Foliot balance with pig's bristle.

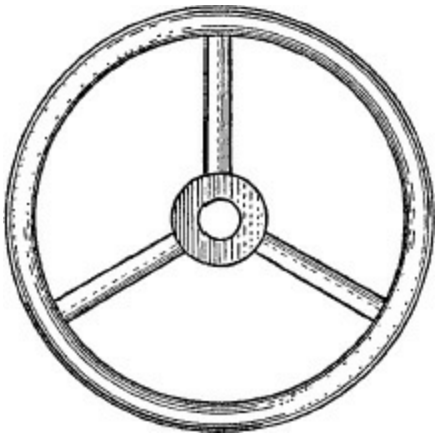

Figure 9. Early form of watch balance.

Following the invention of the balance spring, the three-armed balance wheel appeared. This wheel, shown in Figure 9, was of steel and made very thin. Later the rim was rounded and usually highly polished. The balance spring was fitted below the wheel instead of above it, as is done in modern watches. As with the early clocks, the verge was the type of escapement used.

The balance wheel in modern timepieces varies in construction according to the quality of the movement. Figure 10 shows the type generally used in alarm clocks and popular-priced novelty clocks. The balance is of brass, forced friction-tight on an axis of steel. The pivots taper to a point and run between steel centers that are screwed into the brass plates.

The balance wheel in watches and clocks of better quality is constructed in such a manner as to register time more accurately. This is realized by considering the temperature factor — that is, designing the rim of the balance in such a manner as to compensate for temperature changes, or by using alloys that remain constant.

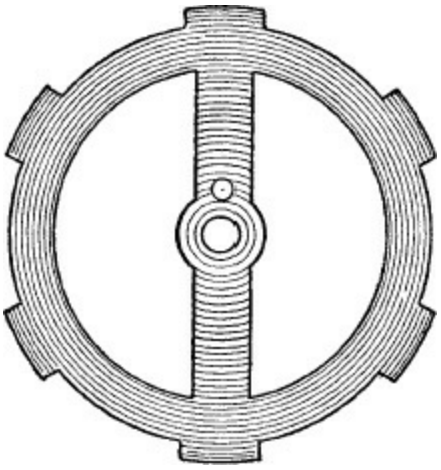

Figure 10. Alarm clock balance.

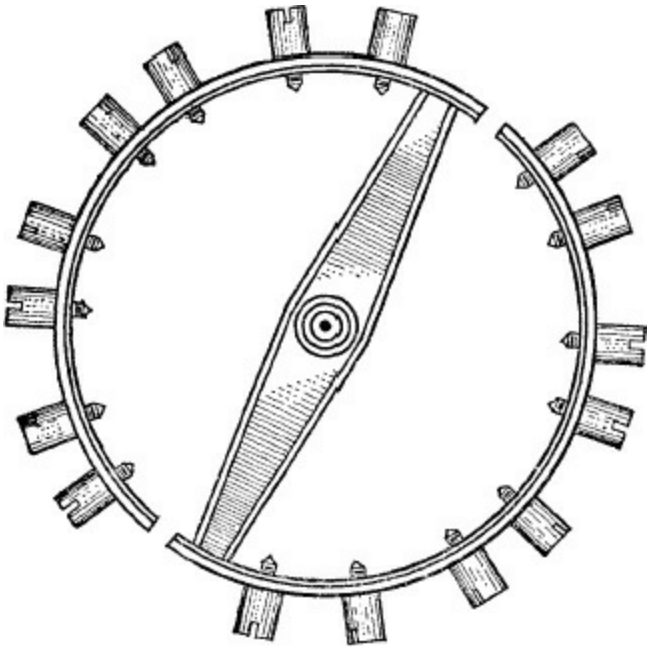

Figure 11. Compensating balance.

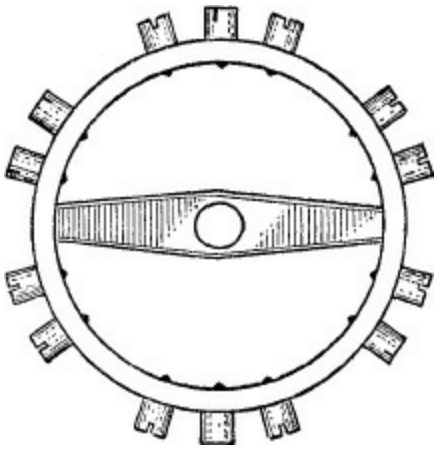

Figure 12. Solid balance as used with Elinvar and Nivarox balance springs.

In addition, the better-quality balance is fitted with screws which may be altered for the purpose of poising and timing. The pivots on the staff are cylindrical and work in jewels for greater precision. Figures 11, 12, 13, 14, and 15 show the types of balances used in watches, portable clocks, and chronometers.

The Balance Formula

The *vibration* of the balance wheel in modern timepieces is dependent on the balance spring. The *time* of vibration is determined by a balance wheel of a certain size and weight coupled with a balance spring of a certain length and strength. The formula by which the time of vibration is determined contains all of these factors and is given as follows:

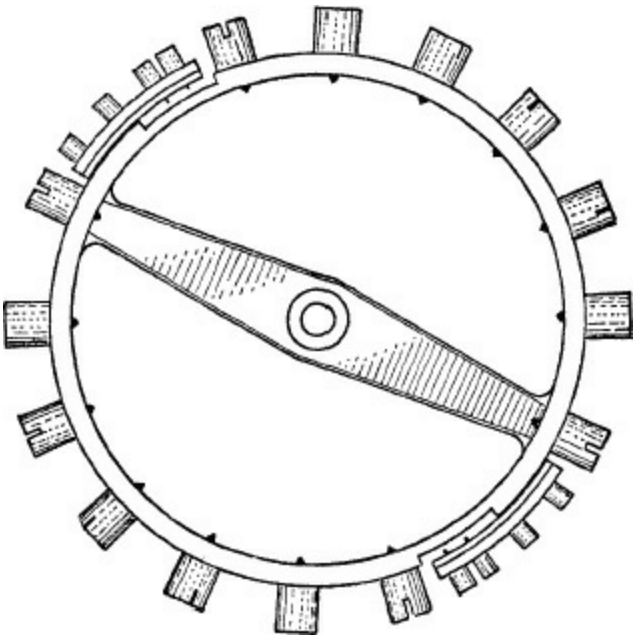

Figure 13. Balance by Paul Ditisheim. Used with the Elinvar balance spring.

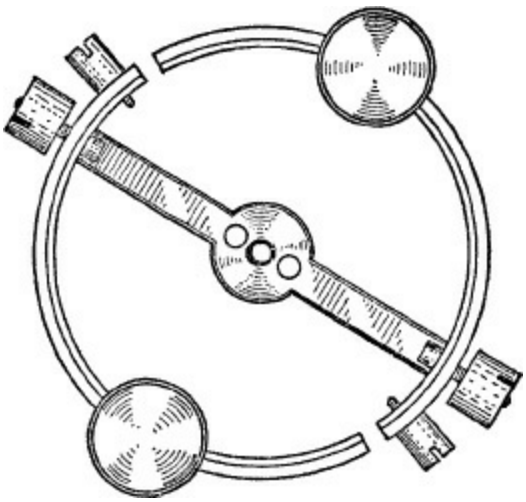

Figure 14. Chronometer compensating balance.

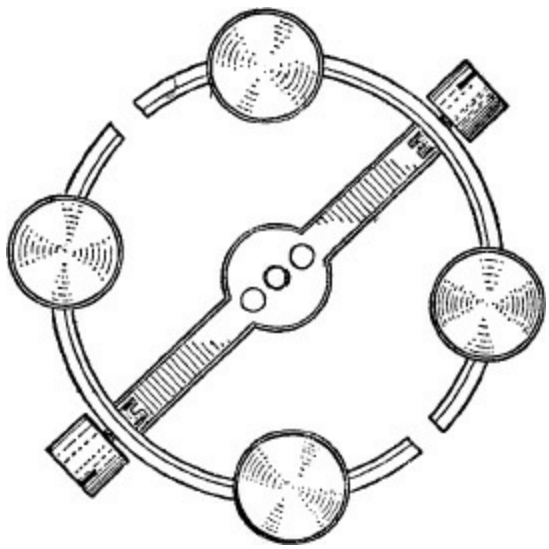

Figure 15. Invar balance for chronometer.

Figure 15A. Wyler shockproof balance.

$$T = \pi \sqrt{\frac{M\, r^2\, L}{E}}$$

in which:

T = The time of vibration (period)
π = 3.1416
M = Mass of the balance
r^2 = Radius of gyration
L = Length of the balance spring
E = Moment of elasticity of the balance spring (strength)

The mass *M* of the balance, as given above, has to do with its weight. The

radius of gyration refers to the radius of the balance, which, in reality, is not the full radius but a radius that reaches approximately to the middle of the rim. If we could imagine a circular ring with all of the mass contained therein, and rotating about its center, the moment of inertia would be equal to the mass and radius of the body. However, in practice, part of the weight of a circular body lies within its circumference and the radius of gyration is likewise moved nearer to the center.

The mass and radius of the balance, taken together, constitute its inertia;* it follows that a large, light balance may have the same inertia (ignoring pivot friction) as a small but heavy balance.

---

* Inertia is that property of any body which causes it to remain as it is — that is, a body at rest remains at rest; and a body in motion tends to remain in motion. Also, it is more difficult to give motion to bodies of great mass and, likewise, it is more difficult to stop the motion of massive bodies than light bodies.

Horologists are obliged to take account of this factor of inertia in the design of clocks and watches. For example, the balance of an alarm clock is much heavier than that of a pocket watch. Alarm clocks, therefore, make 14,400 beats an hour; watches generally make 18,000 beats, and a few very small wrist watches make 19,800 or more beats per hour.

The balance formula is difficult to apply in practice, but the principles governing timing corrections are contained in it, as may be noted in the examples given below.

Correcting a timing error. The balance formula leads us to the supposition that an error in the rate of a timepiece may be corrected in two ways: (1) increasing or decreasing the weight of the balance, or (2) altering the length of the balance spring.

Referring to the balance formula, it will be noted that:

$$T = \sqrt{M} \text{ or } \sqrt{L}$$

therefore:

$$T^2 = M \text{ or } L$$

This suggests that problems related to timing may be solved by proportion.

Example 1.

A clock is losing ½ hour in 24 hours with a balance weighing 16 grammes. What should the correct weight be ?

(The balance must be made lighter by an amount equal to the desired increase in time.)

Therefore:

$$T^2 : M :: T_2^2 : M_2$$

$$(24.5)^2 : 16 :: (24)^2 : M$$

$$\frac{(24.5)^2}{16} = \frac{(24)^2}{M}$$

$$M = \frac{(24)^2 \times 16}{(24.5)^2} = \frac{576 \times 16}{600.25}$$

$$M = 15.35 \text{ grammes}$$

Example 2.

A watch is gaining 1 hour in 24 hours. The balance spring is 20 millimeters long. What should the correct length be?

(The balance spring must be made longer by an amount equal to the desired decrease in time.)

$$(23)^2 : 20 :: (24)^2 : L$$

$$\frac{(23)^2}{20} = \frac{(24)^2}{L}$$

$$L = \frac{(24)^2 \times 20}{(23)^2} = \frac{576 \times 20}{529}$$

$$L = 21.77 \text{ millimeters}$$

The Balance

Motion of the balance. The vibration of the balance, although dependent on a balance spring instead of gravity as with a pendulum, differs from the pendulum by way of one other very important factor. It is a matter of related forces. The tension of the balance spring is proportional to the angle of twist of the balance, whereas the pull of gravity on the pendulum is not proportional to the angle.

Suppose, for example, we turn a balance ¼ turn and allow it to return to its point of rest. It will return and continue to turn nearly as far on the opposite side. Now turn the balance ½ turn and allow it to vibrate as before.

The tension has been increased by two and the velocity has been increased by an equal amount. These varied arcs show a condition through which the displacement, velocity, and acceleration are equally related, and the movement is called *harmonic motion.* Except for certain isolated factors, the balance spring is said to be isochronous and in accord with Hooke's law, which states that *the tension is equal to the velocity.*

However, for practical reasons to be explained later, the balance must take a motion within certain limits to perform the function of good timekeeping. This, then, is the next point to be considered.

The proper arc of motion. The balance arc should not exceed 1½ turns, nor less than 1 turn. This can be determined readily by the following method: Suppose the balance is at rest — that is, there is no tension on the balance spring. Now rotate the balance ½ turn and stop. Release the balance and the force of the spring will cause it to return to its point of rest and its own momentum will carry it ½ turn further. This gives the balance 1 turn, that is, ½ turn in one direction and ½ turn in the opposite direction. Now rotate the balance ¾ turn and allow it to return to its point of rest and as far on the opposite side. The arc of motion is now 1½ turns and the balance will continue to vibrate between these points as long as the proper motive power is maintained. The arms of the balance become visible at the moment the balance completes the arc and starts in the opposite direction. It is, therefore, at the time when the balance stops that the distance covered can be determined. Figure 16 shows the position of the arms for six different arcs of motion.

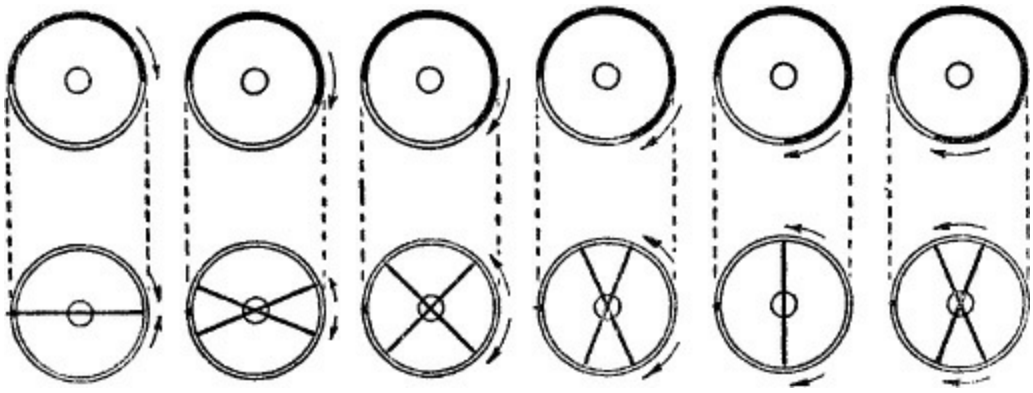

Figure 16. The top row shows the path of half a vibration of the balance. The bottom row shows the relative positions of the arms for a full vibration.

The Balance Spring

The long, fine, coiled wire that encircles the balance staff is called the *balance spring.* It is commonly called the *hairspring* by laymen, probably because the first watches used a pig's bristle to regulate the vibrations of the balance.

The inner end of the balance spring is secured to a *collet,* which is fitted friction tight on the balance staff. The outer end is pinned to a *stud.* In the finer makes of clocks and watches, the stud fits into a hole in the balance bridge and is held secure by means of a small screw. In cheaper clocks, the stud is riveted to the upper plate.

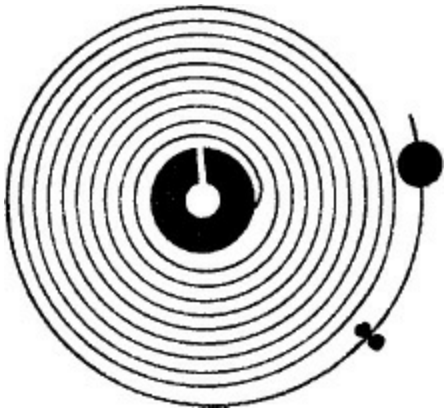

Figure 17. Flat spring.

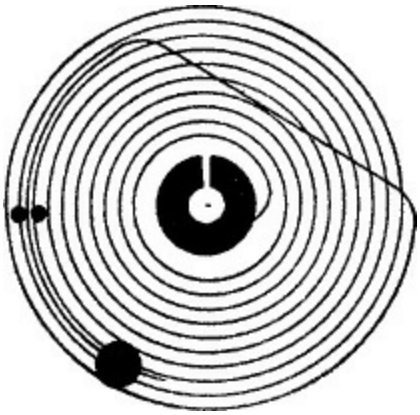

Figure 18. Breguet spring.

There are three forms of balance springs in general use: (1) the flat spring; (2) the Breguet; and (3) the cylindrical. The flat spring (Figure 17) has the stud fixed to the same plane as the body of the spring, with the result

that the vibrations take place in an eccentric manner. The Breguet, named after its inventor, has a portion of the outer coil raised and bent in such a manner as to lie above the body of the spring. The Breguet often take many forms. One of the more popular forms is shown in Figure 18. A correctly designed overcoil causes the vibration to take place in a concentric manner around the balance staff. The cylindrical spring (Figure 19) coils upward and has the appearance of a cylinder. It is used almost exclusively in marine chronometers.

Motion of the flat spring. If we examine a flat spring in motion (Figure 20), we shall observe that the coils have a radial motion — that is, a movement by which the outer coils tend inward and outward from the center. Further examination shows a circular motion which begins at the second coil from the regulator pins and increases as we follow the several coils toward the center. The circular motion reaches its maximum with that coil immediately surrounding the collet, and the radial motion, so clearly evident on the outer coils, practically disappears. It is therefore evident that the circular motion of the outer coils is restricted by the fixed position of the regulator pins. The influence of the pins continues with a gradually reduced effect for about half the total number of coils toward the center, until finally the inner terminal takes over and controls the innermost coils. The coil that lies midway between the regulator pins and the pinning at the collet is called the *neutral coil.* It is so named because the forces, originating at the outer and inner terminals, are neutralized at this point. The variable tensions or forces that take place on both sides of the neutral coil account for the isochronal error of the flat spring.

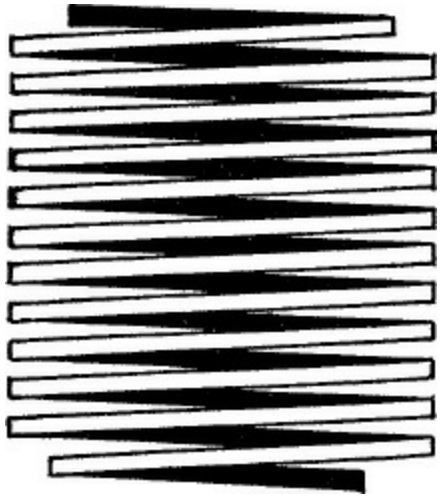

Figure 19. Cylindrical balance spring.

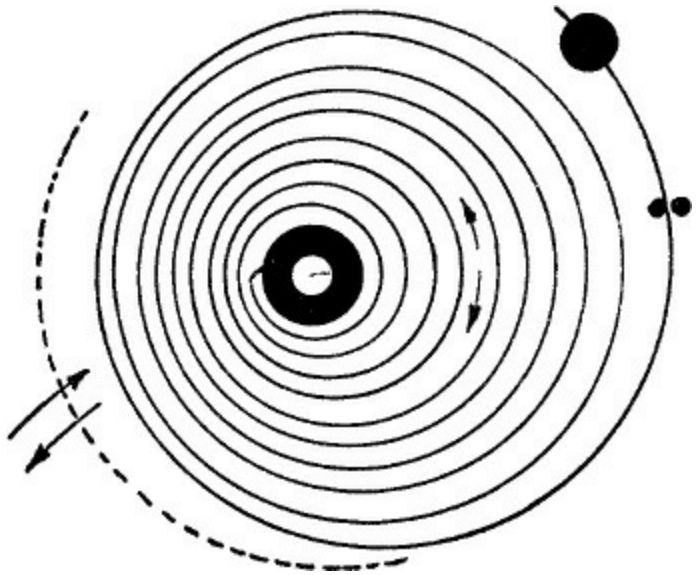

Figure 20.

Detrimental Forces

We have learned that there are several forces that alter the uniform swings of the pendulum. Likewise there are several forces that alter the uniform turns of the balance. The analysis of the escapement error given in the section on the pendulum (page 237) applies also to the balance. Other factors that apply only to the balance assembly are listed as follows:

(1) Isochronal error of the balance spring.

(2) The poise of the balance.

(3) The adjustment of the regulator pins.

(4) Temperature error of the balance and spring.

(5) The poise error of the balance spring.

ISOCHRONAL ERROR OF THE BALANCE SPRING

The forces present on either side of the neutral coil, as indicated in the preceding discussion, cause a retardation or an acceleration, depending on the relative positions of the two eccentric motions as the balance vibrates. The anisochronism thus produced can be varied by altering the length of the spring. Such alterations, of course, change the relative positions of the eccentric motions, or, in words more useful for the present analysis, they

change the angular distance between the inner terminal and the regulator pins. It is this change of angular distance that decides the rate between the long and short arcs. The laws governing the isochronism as concerned with the above statement are as follows:

(1) *When the angular distance between the inner terminal and the regulator pins stands at even coils — that is, whole coils —- the short arcs gain.*

(2) *When the angular distance between the inner terminal and the regulator pins stands at even coils, plus half a coil, the short arcs lose.*

(3) *When the angular distance between the inner terminal and the regulator pins stands at even coils plus one-fourth or three-fourths of a coil, the long and short arcs are more nearly isochronal.*

Let us assume that the arc of motion of a given balance is one turn, as an example of a short arc. If the spring is pinned at even coils, the eccentric motions will stand in opposite directions. According to Law 1, this produces a gaining rate as compared with the long arcs. This can be explained by reason of the fact that the eccentric motion of the outermost coils exerts a force (when wound up) in the direction of the arrow *A*, as in Figure 21, while the eccentric motion of the innermost coils exerts a force in the direction of the arrow *B*, and, since these forces are in opposite directions, there is a tendency toward acceleration as the arcs become shorter than 1½ turns. The maximum is reached at one turn. In unwinding, the forces are reversed, but their relation to each other is the same.

If the spring is pinned at even coils plus half a coil, the eccentric motions will stand in the same direction — that is, opposite the regulator pins. According to Law 2, this produces a losing rate as compared with the long arcs. Since the forces of the eccentric motions are in the same direction (Figure 22), there is less resistance or divergence of forces and the balance may vibrate a little farther ; hence a retardation takes place.

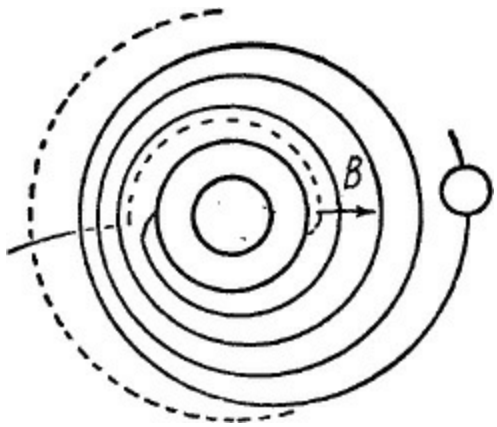

Figure 21.

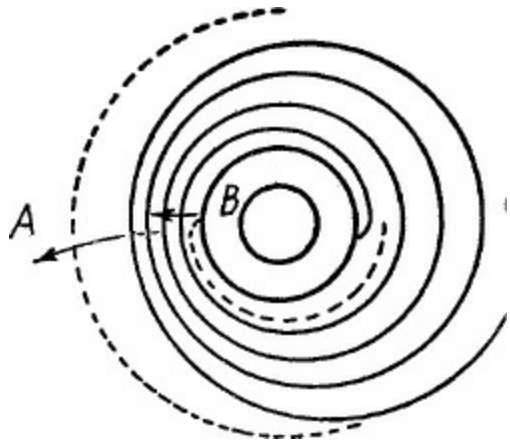

Figure 22.

If the spring is pinned at even coils plus one-fourth or three-fourths of a coil, the eccentric motions will stand at right angles to each other. In this case the effects stated in Laws 1 and 2 will be neutralized, and the timepiece will function at a more nearly isochronal rate. Of course, when the timepiece is put to practical usage, the motion of the balance is constantly changing and this fact complicates results.

Reducing the isochronal error. The superior performance of the Breguet spring in the attainment of isochronism is the reason for the passing of the flat spring. The above analysis of the flat spring would at once suggest that it is possible to vary the isochronism by manipulating the overcoil of the Breguet spring so as to throw the eccentric motion in some desired direction. That is correct reasoning; however, a spring that produces concentric vibrations will attain close enough isochronism in most timepieces. Should extra precision be desired and the most perfect overcoil does not produce the

desired results, the following rules for altering the overcoil may be used:

(1) *If the short arcs are slow, bring in part of the body of the spring and add it to the overcoil.*

(2) *If the short arcs are fast, take part of the overcoil and move it back into the body of the spring.*

Breguet springs are not practical for the smallest of wrist watches.

The last comment above may seem inconsistent with the general argument, but we believe that very small wrist watches should *not* be fitted with the Breguet balance spring. Flat springs are still used in some of the finest Swiss watches. The flat spring occupies less space; it is easier to handle and adjust; and it holds its shape better. The extra precision claimed for the Breguet is lost because of mechanical inaccuracies in the smallest of watches.

There is another difficulty found in very small watches fitted with the overcoil. The body of the spring often bounces against the stud when a jar takes place, and thus interferes with the timekeeping. Since the space is often limited, we cannot raise the overcoil very high, so little can be done to correct the difficulty.

In a few watches, the underside of the balance bridge can be ground away to provide more room for the overcoil. In our own experience, this procedure has been found practical.

THE POISE OF THE BALANCE

One of the most common causes of variation between the long and short arcs is want of poise of the balance, provided the balance lies in a vertical position. In some clocks, the balance lies in a horizontal position, and in this case the poise error has no effect. If the balance is vertical, the poise error works out according to the following statements:

If the excess of weight is on the lower side of the balance when at rest, the timepiece will lose when the arc of motion is greater than 1¼ turns, and will gain when the arc is less.

If the excess of weight is on the top side when the balance is at rest, the result will be reversed and the timepiece will gain when the arc of motion is greater than 1¼; turns and will lose when the arc is less.

Excess of weight below. Let us assume that the excess of weight is on the

lower side of the balance when at rest. Suppose the balance vibrates at an arc of about 1 turn, and in so doing the excess of weight stops at the top of the balance. The force of the spring in returning the balance to its point of rest will receive added energy in the form of gravity acting on the weight. This means that the balance will return to its point of rest a little more quickly than when acted upon by the force of the spring alone. Now assume that the weight, after having reached the bottom, continues the arc on the opposite side. The force of gravity acting on the weight is an added resistance to that of the spring; in other words, the result of an added weight is, in effect, the same as if a stronger spring were used, and the arc will be performed more quickly.

Now suppose that the motion is increased to 1½ turns and, in vibrating to this extent, the weight starts from its point of rest at the bottom, turns three-fourths of a circle, and stops. The force of the spring will encounter a resistance due to gravity acting on the excess of weight as it starts upward toward the top, and after reaching the top and starting downward, the force of gravity prolongs the arc. On the return vibration the weight, starting upward, is resisted by gravity until it reaches the top and is accelerated on its downward path. The over-all effect is that gravity retards the vibrations and the timepiece will lose. Figure 23 shows the path of the excess of weight when the arc of motion is 1½ turns.

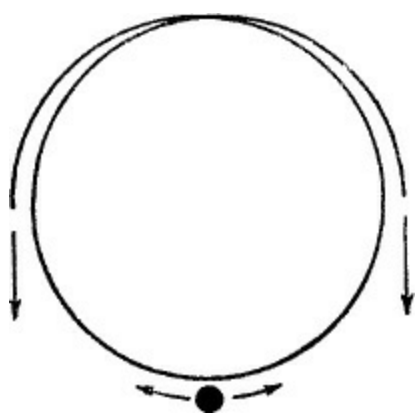

Figure 23.

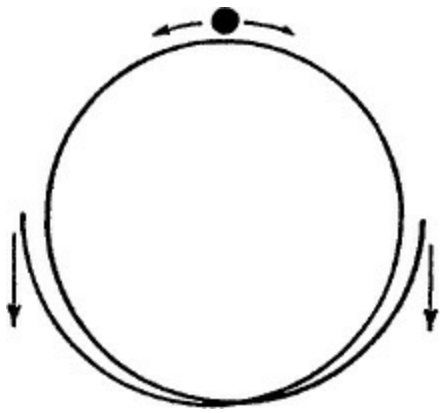

Figure 24.

Excess of weight above. Now suppose that the excess of weight lies on the top side when the balance is at rest. In vibrating to an arc of 1 turn, the excess of weight tends to prolong the vibration on its downward path, and to retard the vibration on its upward path. Thus a *retardation* takes place which is just the opposite in the instance when the excess of weight lies below the balance.

Again increase the arc to 1½ turns, and a *gain* in time takes place. This can be visualized in studying Figure 24, which shows the path of the excess of weight when the arc of motion is 1½ turns.

Neutral arc of motion. Since a given poise error shows either a gain or a loss, depending on the arc of motion, it follows that there should be some arc in which the poise error would have no effect. Such is the case when the arc of motion is slightly less than 1¼ turns. In practice it is impossible to maintain a constant arc. The logical solution, therefore, is to carefully poise the balance and see that the balance takes a proper motion — that is, a motion of not over 1½ turns or under 1¼ turns.

THE ADJUSTMENT OF THE REGULATOR PINS

Another cause of isochronal error is the careless adjustment of the regulator pins. In fact, by slightly opening or closing the pins as the case may require, it is possible to bring the long and short arcs in close agreement.

The effect of the regulator pins may be explained in this way: Suppose, for example, that the regulator pins are opened slightly and the outer coil of the spring vibrates equally between the pins. We have literally made the active length of the spring longer and the clock will go slower. It also

changes the rate between the long and short arcs. For an arc of ½ turn, the rate would be slow, and for 1½ turns the rate would be fast. For arcs shorter than half a turn, the active length of the spring will commence very nearly from the stud. Now, if the arc is increased, the active length of the spring will be shortened, commencing more nearly from the pins. Increasing the arc accelerates the rate and the effect will vary in proportion to the changes taking place in the arc of motion.

Suppose now that the pins are open, as before, but the outer coil does not vibrate equally between the pins — that is, the coil tends to lean against one of the pins. Assume that it requires an arc of 1 turn to lift the coil away from the pin against which it leans. It is clear that for arcs below 1 turn the active length of the spring will commence from the pins, and for arcs above 1 turn the active length will commence more nearly from the stud. This condition will make the long arcs go slower, or, in other words, opposite to that in the former instance. Thus, it can be seen that the condition of the regulator pins may be the cause of many of the disorders in the performance of clocks and watches. It is also true that an intelligent manipulation of the pins is the quickest and simplest means of correcting isochronal variations. The practical use of the regulator pins is stated in the following rules:

(1) *If the regulator pins are closed and the timepiece gains during the short arcs, open the pins slightly.*

(2) *If the regulator pins are open and the timepiece loses during the short arcs, close the pins.*

(3) *If Rule 2 fails to accelerate the short arcs sufficiently, bend the spring near the stud so that the outer coil will strike the inner regulator pin with more force than the outer pin.*

TEMPERATURE ERROR OF BALANCE AND SPRING

The most difficult problem of the horologist of the past was to combat the temperature error. Many ingenious devices have been tried and discarded. Perhaps the first to be reasonably successful was the one invented by John Harrison, who, in 1759, won the £20,000 prize offered by the English government for a marine timepiece. Harrison’s method consisted of a thin strip of steel and a similar strip of brass riveted together and carrying regulator pins on the free end. The piece was secured to the upper plate and the regulator pins were free to slide along the balance spring, making the

spring shorter in heat and longer in cold. This, it can be seen, provided a compensating effect for the varied length and elasticity of the balance spring.

Harrison's compensating device was soon replaced by a compensating balance said to have been invented by Pierre LeRoy about 1765 (see earlier discussion). Except for improvements in design, this balance has been used to comparatively recent times.

Figure 11, page 252, shows the compensating balance for watches and portable clocks. The rim is composed of brass and steel. The brass lies on the outside and constitutes about three-fifths of the total thickness. The rim is cut near the arms at two diametrically opposite points. With a rise in temperature, the brass, which expands more than the steel, is resisted in its effort to lengthen by the resistance of the steel. Since the brass lies on the outside, the ends of the rim must turn inward. This action reduces the mean diameter of the balance and likewise its inertia, thereby compensating for the increased length and reduced elasticity of the balance spring. The opposite takes place when the temperature falls. This is clearly shown in Figure 25. It will be further observed that the loose ends remain reasonably circular during temperature changes, but the radii of the curves change, their centers being at the balance center *O* for the normal temperature and shifting along the arms *AA* for the high and low temperatures. However, the points *BB*, about 60 degrees from the arms, remain at a fixed distance from the balance center, and it is at these points that alterations for the purpose of timing should be made.

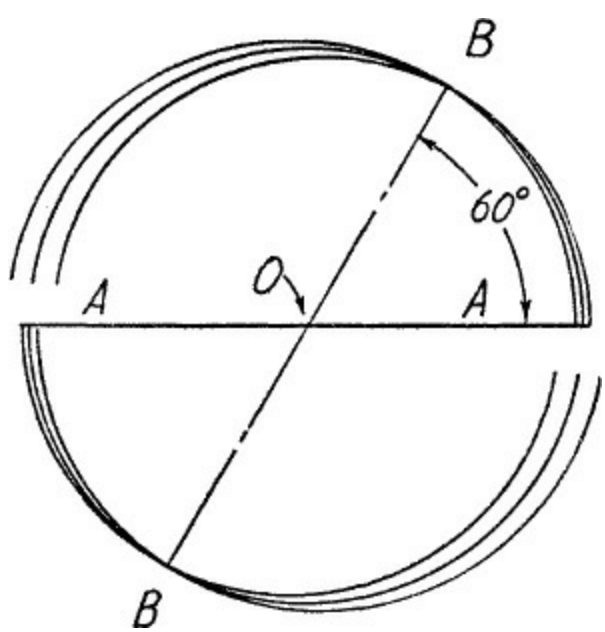

Figure 25.

Middle-temperature error. It is evident from the above analysis that we can adjust the balance screws in such a manner as to compensate for the expansion and contraction of the balance alone and maintain a constant mean diameter. This, however, would not take care of the lengthening and shortening of the balance spring nor for the changes in the elastic force. To compensate for the effect of temperature on the spring, it is necessary to add extra weight to the loose ends of the rim. This results in a temperature error between the extremes of heat and cold, known as the *middle-temperature error* because the balance does not compensate equally for changes in the elastic force and for changes in the length of the spring. This is shown by insufficient compensation (weights not moving in near enough toward the center of the balance) in the higher temperatures; and too great a compensation (weights moving too far away from the center) in the lower temperatures. The result is a higher rate in the normal temperature, usually 2 to 6 seconds in 24 hours, depending on the grade of the timepiece.

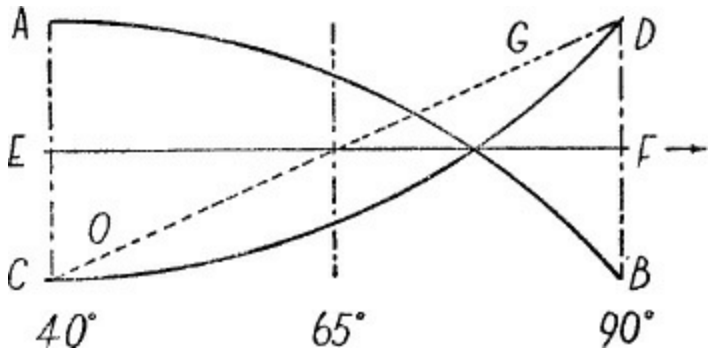

Figure 26.

This factor is clearly shown in Figure 26. The line *AB* indicates the loss in the rate due to a raising temperature on the balance spring. Note that the line *AB* is curved which indicates that the loss in rate is not uniform but increases more rapidly as the temperature raises. To offset this rate by a compensating device, we must produce the opposite effect as indicated by the line *CD.* The theoretical result would be a constant mean rate along the line *EF*.

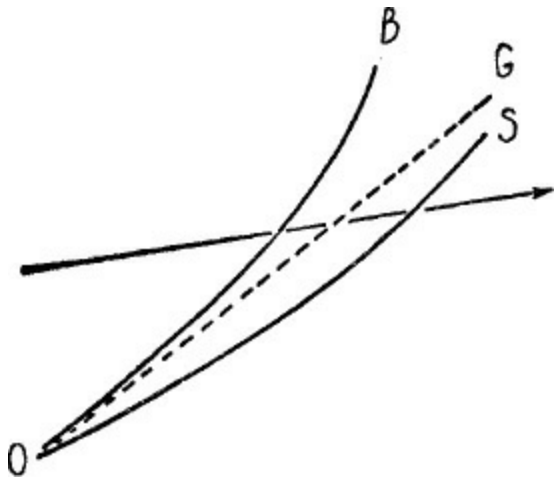

Figure 27.

This, however, cannot be realized in practice with the ordinary brass and steel compensating balance for reasons that we shall now explain. Referring to Figure 27, the line *OB* indicates the effect of expansion on the brass, and *OS* on the steel, which when combined as in a compensating balance, results in a gain, as indicated by the dotted radial line *OG*. This is arrived at by determining the algebraic difference between *OB* and *OS*. The radial line *OG* indicates that the inward movement of the rim is in direct proportion (or nearly so) to the increase in temperature, whereas the variation of elasticity of the spring is not uniform, but, as pointed out above, increases more rapidly as the temperature raises. Now, by replacing the line *OG* in Figure 26, it can be seen that there would be a continually accelerated rate until the middle temperature is reached and then a loss proportional to the gain. Actually this curve is a parabola as shown in Figure 28.

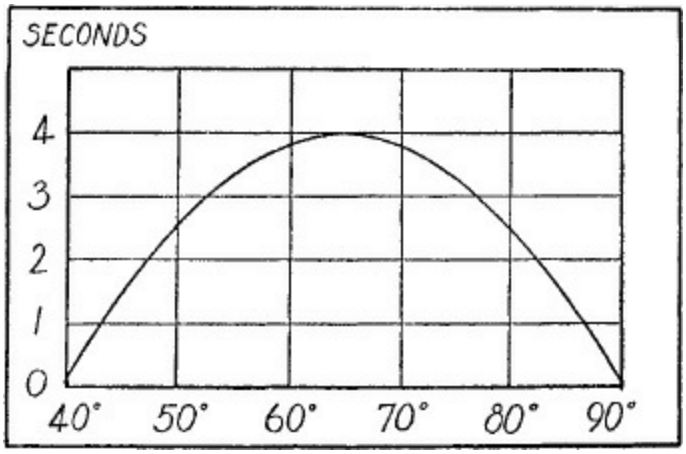

Figure 28.

The above analysis would suggest that the middle temperature error could be reduced or perhaps eliminated if the steel were replaced with a metal of small expansion. Such a metal was produced by Dr. C. E. Guillaume in 1899. He called the metal *Invar*[*]. Compensating balances made of brass and Invar has reduced the middle temperature error to less than ½ second in 24 hours and have been used principally in chronometers. Figure 15 shows the Invar balance.

---

[*]Invar is also used in pendulum rods.

Alloys for balance and balance spring. Recent years have seen the development and improvement of special alloys for both balance and spring in which the elasticity remains constant during temperature changes. These alloys are made of iron, nickel, chromium, manganese, tungsten, beryllium and silicon. Various combinations of the above elements are used and marketed under such trade names as Elinvar, Corunium, Conel, Elgineum, and Nivarox.

Elinvar is the oldest of the alloys to be used in balance springs. It is the result of further research by Dr. Guillaume and was produced in 1913. The alloy has a slight expansion and has been used with a balance of a single metal as shown in Figure 12. A compensating balance with short bimetalic pieces has been used with Elinvar springs by Paul Ditisheim with excellent results. The Ditisheim balance is shown in Figure 13.

Nivarox, one of the more recent alloys developed for the balance spring, is said to be superior to Elinvar. It is the result of researches made by R. Straumann, technical director of the Fabriques de montres Thommen, S.A. In addition to maintaining a constant elasticity, the alloy is nonmagnetic and nonrusting.

Thus the temperature error has been solved to the great satisfaction of horologists. The solid balance is much easier to handle; it holds its shape and keeps its poise. Chronometer makers since Harrison have worked on the problem — over **a** period of nearly 200 years.

Correcting the temperature error in the compensating balance. The compensating balance is usually adjusted to temperature between 40 and 95 degrees Fahrenheit. The correction consists of moving one or more pairs of

screws from one location to another. For example: if the timepiece loses in heat, the screws are moved toward the free ends of the rims. This carries more of the mass toward the center of the balance and the inertia is reduced, thereby effecting a compensating action for the increased length and reduced elasticity of the balance spring. If, on the other hand, the timepiece gains in heat, the screws are moved toward the arms of the balance.

The chronometer balance has a pair of movable weights that may be shifted along the rims to effect temperature adjustment. Set screws secure weights to rims.

THE POISE ERROR OF THE BALANCE SPRING

Probably the most interesting phenomena in horological theory is the poise error of the balance spring. The perfectly adjusted balance spring of a pocket watch, placed vertically, will show practically no poise error when the balance spring is at rest. However, at the moment the spring starts winding up, or unwinding, around the collet a poise error develops. The nature of the error is according to the following statements:

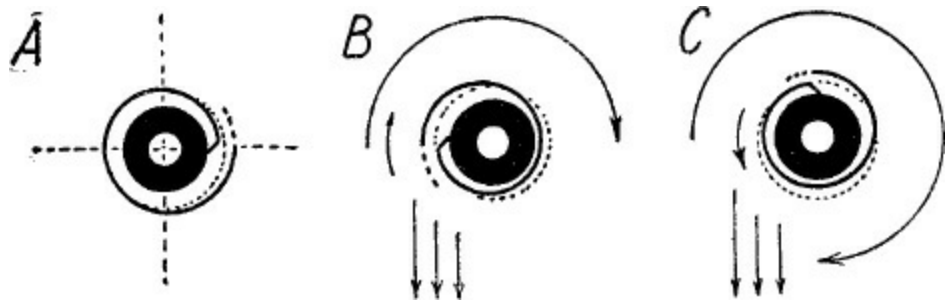

Figure 29.

(1) *When the middle of the first half of the innermost coil of the balance spring tends upward, the watch will gain.*

(2) *When the middle of the first half of the innermost coil tends downward, the watch will lose.*

(3) *When the middle of the first half of the innermost coil tends to the right or to the left, the watch rates between the extremes of the fast and slow positions.*

Analysis of the clockwise motion of the balance spring when the middle of the first half coil is up. In Figure 29, are shown three illustrations

of the first coil of the balance spring. At *A* the spring is shown at rest and the balance spring fits quite closely within the dotted circle which is concentric to the balance center. The illustration *B* shows the same spring after the balance has been turned clockwise 1/2 turn, thus winding up the spring. It will be noted (at *B*) that the portion of the spring opposite the pining point has been pulled *in* close to the collet, creating a condition whereby the radius from the balance center to the pining point is longer than the side opposite. Gravity acts on the side with the longer radius and the vibrating unit is retarded during its clockwise motion and the balance arc is shortened. Assume now, that the balance continues the arc another 14 of a turn, as shown at *C*, and the pining point comes to a stop, momentarily, directly above the collet. In this case gravity confines to act as a retarding force on the clockwise motion of the pining point, but at the moment the balance turns counterclockwise, gravity accelerates the downward motion of the pining point. The over-all result is such that the time of vibration **is** quickened as given in statement (1).

Counterclockwise motion of the balance spring. When the position of rest is reached, as at *D*, Figure 30, the balance spring is under no tension momentarily. However, as the balance continues to turn, the spring is unwound. At *E* the balance has made ½ turn, counterclockwise, and at *F* the balance has turned an additional ¼ of a turn. Note that the spring now has a longer radius on the side opposite the pining point and the gravitational pull has been transferred from the pining point to the opposite side. The over-all result is such that the vibration continues to be quickened.

Analysis of the clockwise motion of the balance spring when the middle of the first half coil is down. Assume that the spring is at rest with the middle of the first half coil lying below the collet, as shown at ***G,*** Figure 31. Winding up the spring clockwise ¾ of a turn, it will appear as shown at *H.* The longer radius is on the side of the pining point, and as gravity acts on this portion of the spring, it is seen that gravity has prolonged the arc during the downward motion of the heavy point. On the return vibration, gravity will resist the force of the balance spring. The over-all effect is that the time of vibration is extended as will be noted in statement (2).

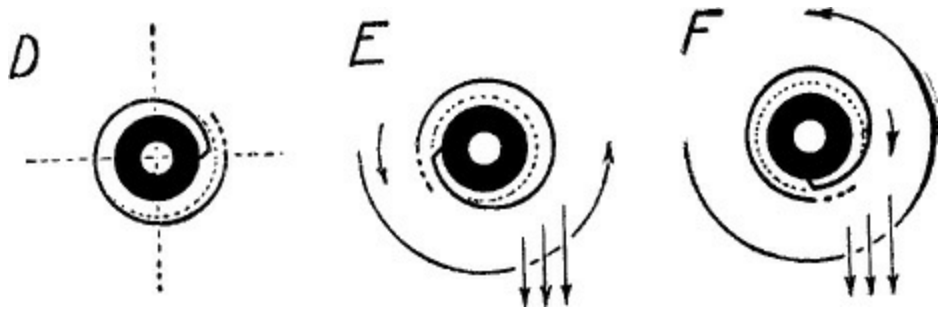

Figure 30.

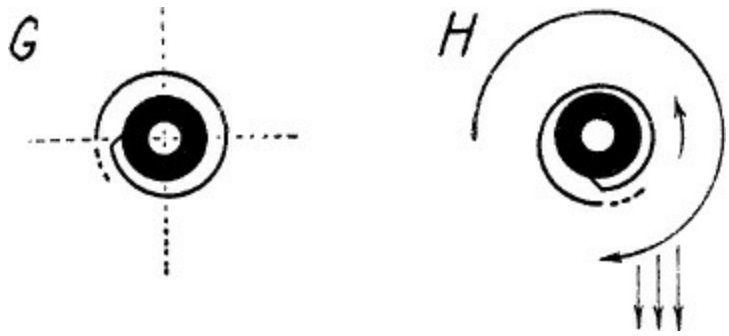

Figure 31.

The usual difference between the fast and slow positions is from 15 to 30 seconds in 24 hours, depending upon the grade of the watch. Adjusters of fine pocket watches and railroad grades generally adapt the balance spring to the watch in such a manner that the middle of the first half coil around the collet stands in the direction of pendant up. The reason for this is that the vertical positions usually run slower than the dial up and dial down positions.

BIBLIOGRAPHY

Britton, F. J., *The Watch and Clock Makers' Handbook.* Brooklyn, Chemical Publishing Co., 1938.

Britton, T. W., *Horological Hints and Helps.* London, The Technical Press, Ltd., 1942.

Chamberlin, Paul M., *It's About Time.* New York, Richard R. Smith, 1941.

Gamm, F. J., *Watches, Adjustment and Repair.* Brooklyn, Chemical Publishing Co.

deCarle, Donald, *Watchmakers' and Clockmakers' Encyclopaedic Dictionary.* London, N.A.G. Press, 1950.

deCarle, Donald, *Practical Watch Repairing.* London, N.A.G. Press, 1946.

Drepperd, Carl W., *American Clocks.* Garden City, N. Y., Double-day & Co., Inc., 1947.

Fried, Henry B., *The Watch Repairer's Manual.* New York, D. Van Nostrand Co., 1948.

Fried, Henry B., *Bench Practices for Watchmakers.* Denver, Colo., Roberts Publishing Co., 1954.

Gazeley, W. J. *Watch and Clock Making and Repairing.*, New York, D. Van Nostrand Co., 1953.

Goodrich, Ward, *The Modern Clock.* Chicago, North American, 1950.

Gordon, G. F. C, *Clockmaking, Past and Present.* London, Crosby, Lockwood & Son, 1928.

Hope-Jones, Frank, *Electrical Timekeeping.* London, N.A.G. Press, 1940.

Huyghens, Christian, *Horologium Oscillatorium.* Paris, 1658.

Kelly, Harold C, *A Practical Course in Horology.* Peoria, Ill., Chas. A. Bennett Co., 1944.

Levin, Louis and Samuel, *Practical Benchwork for Horologists.* Los Angeles, Calif. Louis Levin & Son, 1944.

Langman and Ball, *Electrical Horology.* London, Crosby Lockwood and Son, 1930.

McCarthy, J. R., *A Matter of Time.* New York, Harper & Brothers, 1947.

Milham, Willis I., *Time and Timekeepers.* New York, The Macmillan Co., 1942.

Player, J. W., *Watch Repairing.* London, Crosby Lockwood & Son, Ltd., 1945.

Rawlings, A. L., *The Science of Clocks and Watches.* New York, Pitman Publishing Co., 1948.

Seibel, Emanuel, *Complicated Watches.* Denver, Colo., Roberts Publishing Co, 1945.

Wilkinson, T. J., *The Escapement and Train of American Watches.* Philadelphia, Pa., 1928.

Yamaguchi, Ryuji, *The Clocks of Japan.* Tokyo, Nippon Hyoron-Sha Publishing Co., 1950.

INDEX–WATCH REPAIR by Kelly

A

Addenda, 123
Adjusting
  escapement, 72
  isochronism, 262, 267
  position, 89
  regulator pins, 267
  temperature, 274
Air, its effect on pendulum, 237
Alarm clock, 42
Alarm clock escapement, 44
Alloys for balance and spring, 273
American mantel clocks, 107
Anniversary clocks, 39
Automatic watches, 184

B

Balance assembly repairs, 61
Balance formula, 253
Balance motion, 258
Balance spring
  Breguet, 260
  cylindrical, 260
  flat, 260
  general discussion, 259
  isochronal error, 262

poise error, 274
temperature error, 269
truing of, 65
Balance staff, 62
Banking to the drop, 76
Barometric error, 236
Barrel cap, fitting of, 55
Barrel hook, fitting of, 54
Beat
chronometer escapement, 169
cylinder escapement, 163
duplex escapement, 166
lever escapement, 161
putting escapement in, 72
Bench, 26
Breguet balance spring, 260
Bushings, fitting of, 34

C

Calendar mechanisms, 221
Cannon pinion, 85
Chimes, 179
Chiming mechanism, 181
Chronographs, 204
Chronometer escapement, 166
Circular error, 240
Circular pitch, 128
Civil time, 14
Cleaning watches, 46
Clock
cleaning, 29, 42
escapement repairs, 35, 44

escapements, 132
mainspring problems, 32
trains, 103
Closing holes, watches, 56
Compensating balance, 269
Compound pendulum, 231
Corner safety test, 78
Counting wheel mechanism, 171, 174
Curve test, 78
Cycloidal cheeks, 243
Cylinder escapement, 161
Cylindrical balance spring, 260

D

Daylight saving time, 19
Dead-beat escapement, 141
Dedenda, 125
Denison escapement, 145
Dial
train, 85, 113
watch, 86
Draw, 73
Drop, 74
Duplex escapement, 164

E

Earth as a clock, 9
Elinvar 273
Engaging friction, 126
Epicycloid, 123
Equation of time, 15
Equinoxes, 11

Error
circular 240
isochronism 262, 267
position 89, 265, 274
temperature, 269
Escapement
adjusting, 72
chronometer, 166
cylinder, 161
dead-beat, 141
Denison, 145
duplex, 164
errors, 81, 236
fork and roller action, 76
Galilei, 134
general discussion, 132, 153
gravity, 145
Leroy, 150
lever, 153
Mudge, 155
pin-pallet, 144
pin-wheel, 143
rack lever, 156
ratchet tooth, 156
recoil, 139
Reifer, 148
terminology, 133
verge, 136
wheel and pallet action, 73
Eye loupes, 24

F

Flat balance spring, 260
Friction jeweling, 57
Friction of air, 239
Full diameter, 127

G

Galilei escapement, 134
Gearing, 122
Going barrel, 119
Graham's pendulum, 245
Gravers, 23
Gravity escapement, 145
Grinding powders, 25
Guard safety test, 78

H

Hairspring, 259
Hands
  fitting of, 86
  repairing of, 37
Harrison's pendulum, 246
Holes, closing of, 33, 56
Huyghens, 138

I

International date line, 19
Inertia of air, 239
Invar, 273
Invar pendulum, 247
Involute gearing, 130
Isochronism
  adjusting, 262, 267

balance spring, 262

J

Jewels, fitting of, 57

L

Lantern pinions, 129
Leroy escapement, 150
Lever
escapement, 153
too long, 82
too short, 82
Lift, 74
Locking too deep, 81
Locking too light, 81

M

Magnetism, 87
Mainspring clock, 32
correct length, 121
correct thickness, 120
gauges, 53
watches, 53,120
Maintaining power mechanism, 111
Main train
spring-driven clocks, 106
watch, 56
Mean time, 14, 15
Middle temperature error, 270
Motion of pendulum, 232
Motor barrel, 119
Mudge escapement, 155

N

Nivarox, 274

P

Pallet frame clearance, 83
Pendulum
  formula, 234
  four laws of, 232
  Harrison's, 246
  Invar, 247
  motion of, 232
  terminology, 230
  zinc tube, 247
Pin-pallet escapement, 144
Pin-wheel escapement, 143
Pitch
  circle, 122
  diameter, 126
Pivoting, 34
Pivots, polishing of, 60
Poise error of balance spring, 274
Poising balance, 66
Polishing powders 25

R

Rack and snail mechanism, 175, 177
Rack lever escapement, 156
Ratchet tooth escapement, 156
Recoil escapement, 139
Regulator pins, adjustment of, 267
Reifer escapement, 148
Removing broken screws, 56

Repairing complicated watches, 224
Repairs, balance assembly, 61
Roller jewel, 64

S

Screw drivers, 22
Self-winding watches, 184
Ship bell strike, 178
Sidereal day, 11
Simple pendulum, 231
Slide, 83
Solar day, 13
Split second chronograph, 213
Stem, fitting of, 55
Stop watch, 200
Striking mechanisms
  general discussion, 171
  repair of, 36

T

Temperature
  adjusting, 274
  error, 244, 269
Tick, watch, 84
Time reckoning, 8
Time zones, 18
Timing error, correction of, 257
Train, repairing of, 33, 56
Truing
  balance, 65
  balance spring, 67
Tweezers, 23

V

Verge escapement, 136

W

Watch
  cleaning machine, 53
  escapements, 153
  rate recorder, 89
Watches
  cleaning of, 46
  that stop, 96
Weight-driven clocks, 104
Weight of air, 239
Weight of pendulum, 240
Wheel, fitting teeth to, 35
Wheel work
  clocks, 102
  watches, 116
Working conditions, 26
Workshop, 26

Z

Zinc tube pendulum, 247

ALSO AVAILABLE

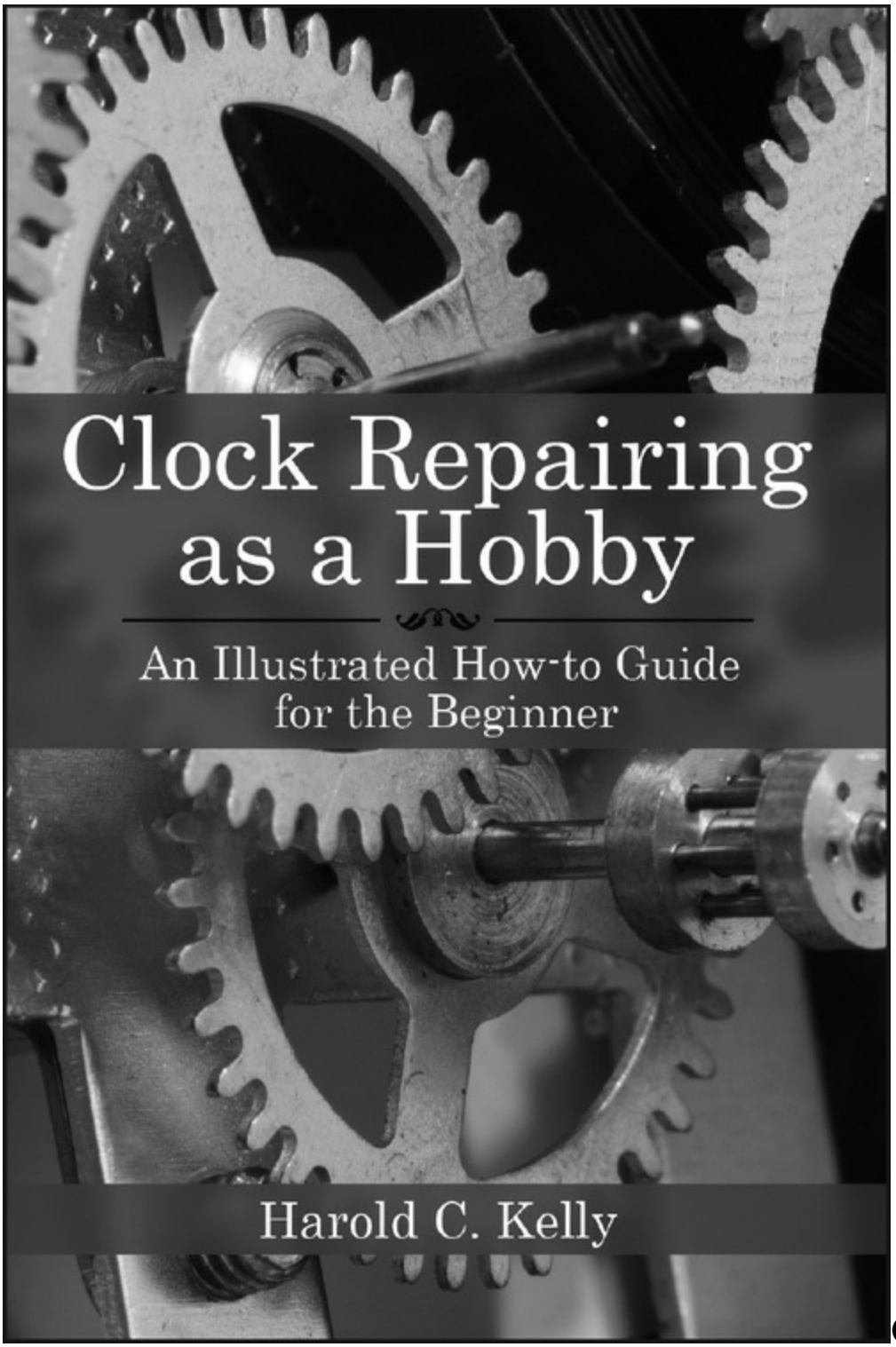

Clock Repairing as a Hobby

An Illustrated How-to Guide for the Beginner
by Harold C. Kelly

All of the precise and delicate gears and levers in a clock can appear dizzying to the amateur, but this guide, with its wonderfully detailed diagrams, can clear things up. It covers the theory behind clock movement and design, including the particulars of escapements, pendulums, balance wheels, and even the sheet music for popular chimes. The American striking clock, the 400-day clock, and the alarm clock receive special attention. The in-depth information, including explanations of clock repairing terminology and details on the tools, materials, and supplies that are needed for success, will benefit even skilled enthusiasts.

$12.95 Paperback • 128 pages

ALSO AVAILABLE

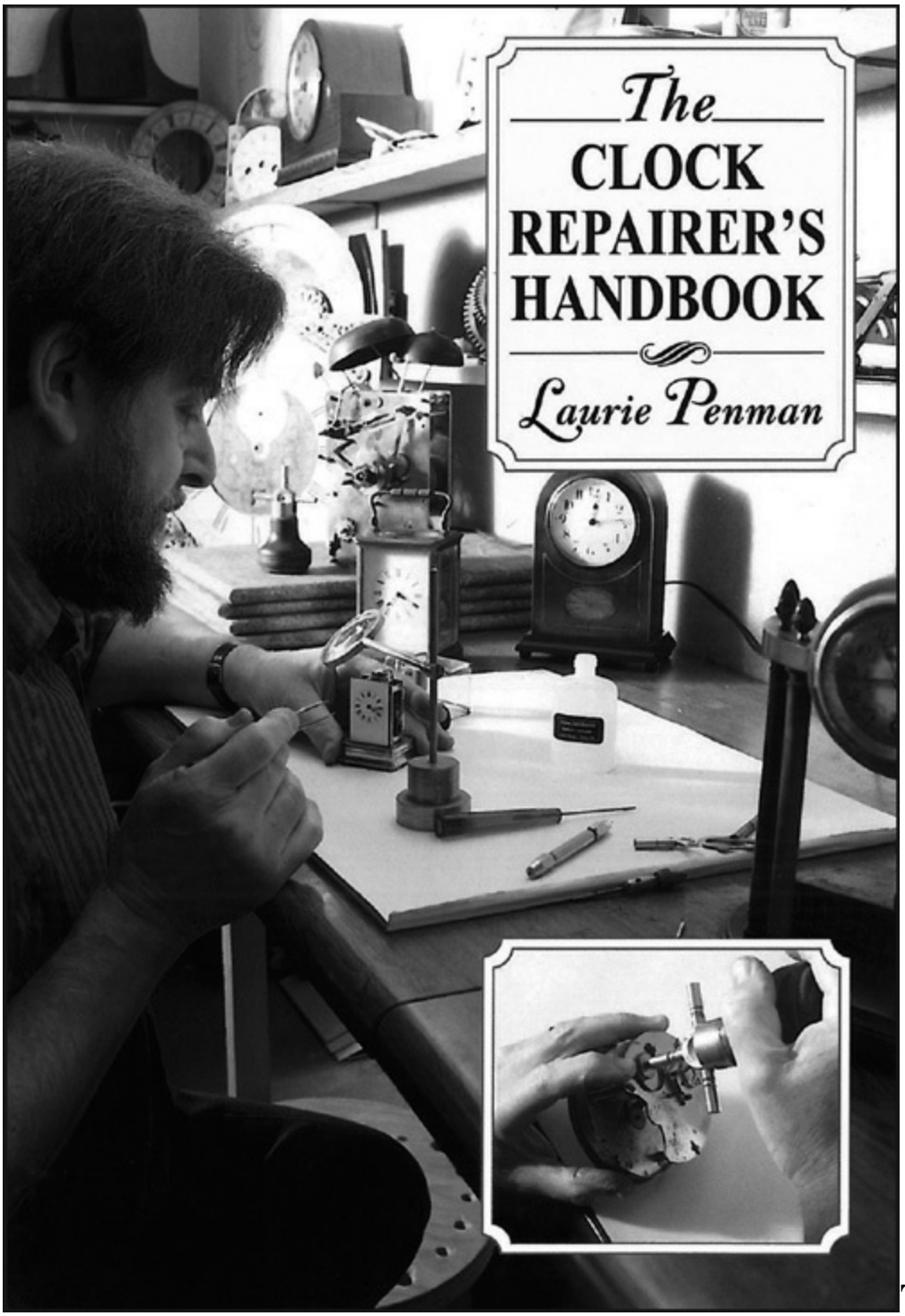

The Clock Repairer's Handbook

by Laurie Penman

Laurie Penman has written an indispensable guide for both the absolute beginner and the experienced clock enthusiast. *The Clock Repairer's*

Handbook provides information on how to repair and maintain a clock's delicate mechanics and teaches the basics of clock repairing through detailed, easy-to-follow instructions and more than 300 instructive diagrams and illustrations. It includes advice and directions for cleaning clock movements, pivoting and mounting, fixing train faults and gears, the importance of lubrication and friction, and how to make sure the strike and chimes work on the hour, every hour. *The Clock Repairer's Handbook* provides all the necessary information to troubleshoot any clock's problems and to make sure your clock continues to run in perfect order for generations to come.

$14.95 Paperback • 176 pages

ALSO AVAILABLE

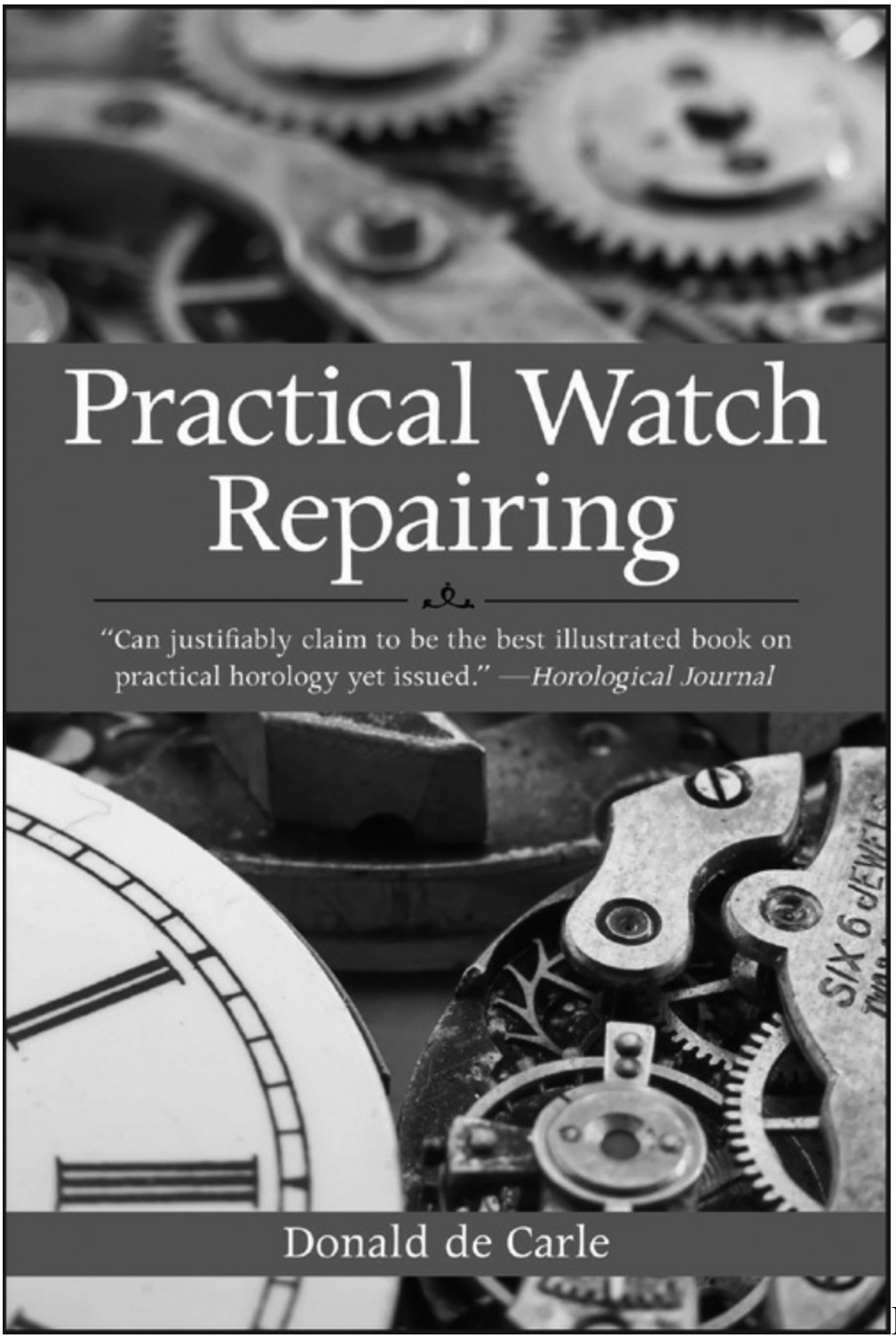

Practical Watch Repairing

by Donald de Carle

The absorbing and everlasting subject of watch repairing has been dealt with

in books in many languages throughout the years. But when de Carle first set out to write *Practical Watch Repairing* in 1946, it was with the intention of creating a textbook "that a watchmaker can understand, even if he can't read." With over 550 instructional black-and-white illustrations and an approach that assumes no prior watch-repairing experience, this book achieves and surpasses that lofty mission, and has been touted as "the best illustrated book on practical horology" *(Horological Journal)* ever written. For the readers in his audience, de Carle has provided well-informed discourse on every topic a watchmaker, or aspiring watchmaker, needs to know. With *Practical Watch Repairing*, even a layman can become a watch-repair specialist.

$14.95 Paperback • 336 pages

ALSO AVAILABLE

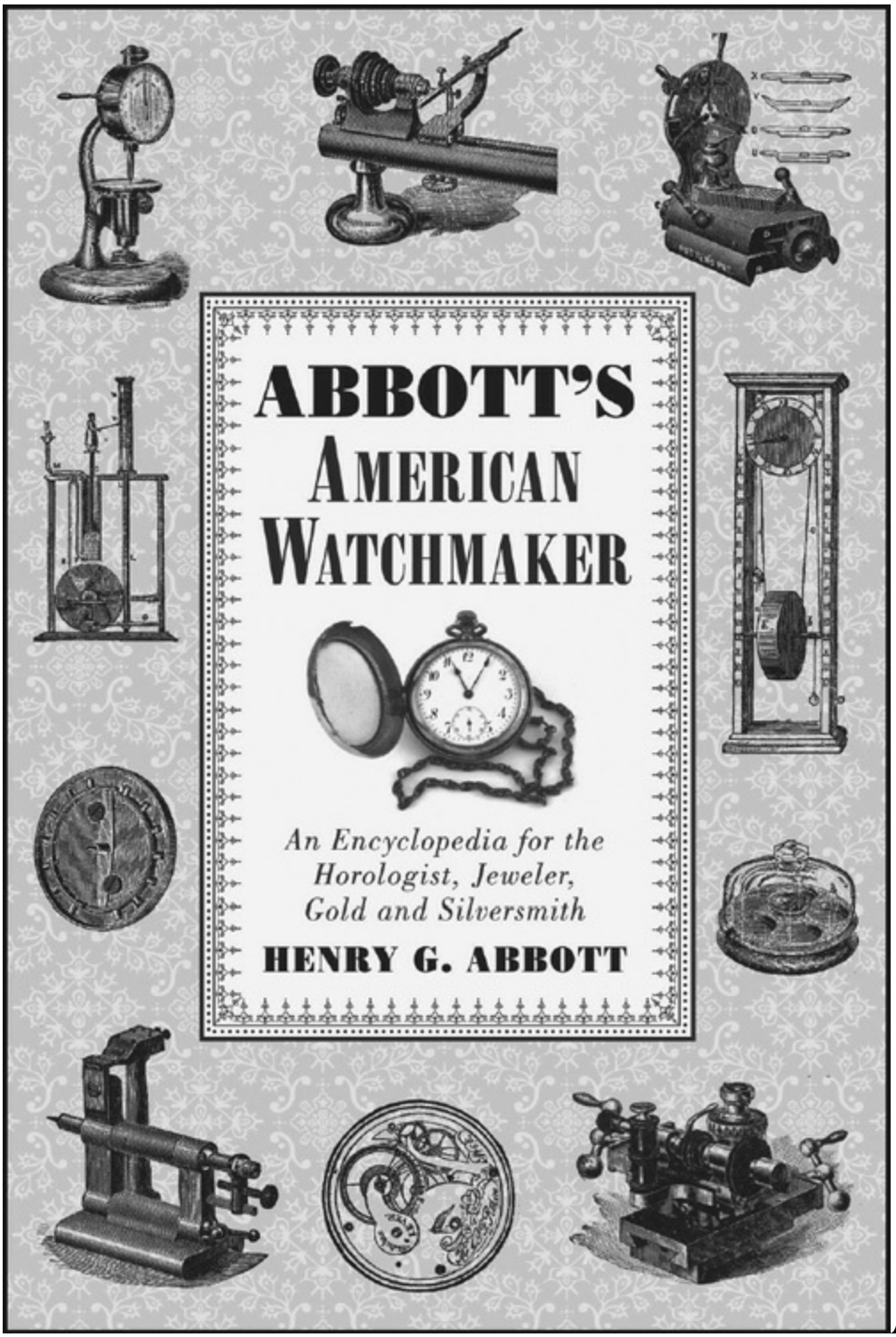

Abbott's American Watchmaker

An Encyclopedia for the Horologist, Jeweler, Gold and Silversmith
by Henry G. Abbott

Containing hundreds of private receipts and formulas compiled from the most reliable sources, this encyclopedia is a comprehensive, masterfully illustrated guide to traditional watchmaking and jewelry fraternity. Inside are complete directions for using all sorts of tools, attachments, and devices of the trade. Among hundreds of helpful diagrams and precise illustrations are thorough explanations of adjustments; directions for making all kinds of alloys; a review of all the escapements, their action, construction, and proportion; an exhaustive treatise on balances, their expansion and contraction, auxiliaries, sizes and weights, and directions for poising; instructions for making and replacing new staffs; and more. This distinctively American approach to watchmaking remains a classic yet useful reference for both beginner and skilled watchmakers.

$16.95 Paperback • 386 pages